2008 Application Guide

complete kits
spindles / ball joints
coilover kits
lowering / lifting struts
springs / spring spacers
rear leaf springs / block kits
c-section / flip kits
shock absorbers
anti-sway bars
lowering / lifting shocks

The Belltech Story

Just as the idea of customizing sport trucks was catching on in the '80s, a small company in Fresno, California decided to build a suspension system that would not only lower trucks, but do so in a way that would change the way they would ride for decades to come.

Belltech's pioneering efforts more than 20 years ago serve as the foundation of the company's success today with a focus on engineering, research and development and most importantly quality.

A Better Solution

While trucks were being lowered in the late '80s, their suspensions were improvised versions of stock suspensions and faced numerous performance issues including poor ride performance. Belltech's design staff crafted a customized, purpose-built suspension which lowered the vehicle, but front end geometry stayed the same. From this innovative idea, an entire industry was born: the "Sport Truck" craze in America was officially launched.

Keeping with the spirit of the company's "best performing" suspension, the Belltech staff designed and created an entire series of components using durable high-strength materials and designs. The result has made Belltech the most requested and successful truck suspension brand in the industry.

With a lowered suspension line of products, the company turned its focus to another important piece of ride quality - shocks. Stock shocks work well with a stock suspension, but due to the modified ride height the original shock geometry was affected. Belltech introduced the Nitro Drop Shock and Nitro Active line featuring vehicle-specific designs that revolutionized the entire suspension system.

Belltech later took its focus on shocks to a new level with the introduction of the Nitro Drop 2 and Street Performance shock. These shock absorber lines utilize twin-tube technology and separate rebound and compression valves to further improve ride quality. More importantly, it meant that enthusiasts now had more options for customizing their truck than ever before.

Growth of Expertise

In early 2005 Belltech, and its sister company Suspension Techniques, joined the team of KW automotive North America, Inc. KW's rich background in race suspension design and development allowed Belltech to accelerate its growth in product development through access to expanded technologies.

Today's trucks and SUV's are built on more sophisticated chassis' than ever before, utilizing McPherson struts and independent set-ups on both front and rear axles. These advancements in vehicle design demand a broader range of lowering solutions including the company's innovative height adjustable coilovers.

Belltech Today

Belltech's growth during the past two decades have made it possible for the company to grow from a modest beginning, to a state-of-the-art manufacturing facility. Belltech's Sanger operation provided the opportunity for the company to expand its business including additional space for both its Engineering and Research and Development teams. The new additions have resulted in the development of new products like the GM Colorado/ Canyon lowering Ball Joint and the new line of Ford F-150 drop spindles.

Whether it is starting an entirely new trend or continuing to improve upon existing products, Belltech has become recognized as a leader in the suspension industry. What began more than 20 years ago as an idea is now one of the most respected companies in the industry. In fact, it is that same entrepreneurial spirit, focus on customer service and uncompromising quality that make Belltech one of the world's most respected manufacturers of suspensions.

Trust in Belltech: The leader in Sport Truck suspensions for over twenty years!

SPECIALTY EQUIPMENT MARKET ASSOCIATION
SEMA
Serving the Motor Vehicle Aftermarket

Multiple SEMA Best New Product Award Winner

Table of Contents

Belltech Complete Kits 4-11

Chevrolet / GMC Colorado / Canyon	6
Chevrolet / GMC S-Series 2WD/4WD Applications	6
Chevrolet / GMC Fullsize Truck 2WD/4WD Applications	6-8
Chevrolet / GMC SUV 2WD/4WD Applications	8-9
Chevrolet / GMC Van / Car Applications	9
Dodge Truck and SUV Applications	9-10
Ford Truck and SUV 2WD/4WD Applications	10
Import Truck and SUV Applications	10-11
Belltech Coilover Kits	11

Products by Manufacturer 12-29

Chevrolet / GMC Colorado / Canyon	14-15
Chevrolet / GMC S-Series 2WD/4WD Applications	14-17
Chevrolet / GMC Fullsize Truck 2WD/4WD Applications	16-20
Chevrolet / GMC SUV 2WD/4WD Applications	20-24
Chevrolet / GMC Van / Car Applications	24-25
Dodge Truck and SUV Applications	24-27
Ford Truck and SUV 2WD/4WD Applications	26-29
Import Truck and SUV Applications	28-29

Shocks 30-35

Chevrolet / GMC Colorado / Canyon	32
Chevrolet / GMC S-Series 2WD/4WD Applications	32
Chevrolet / GMC Fullsize Truck 2WD/4WD Applications	32
Chevrolet / GMC SUV 2WD/4WD Applications	32-33
Chevrolet / GMC Van / Car Applications	33
Dodge Truck and SUV Applications	33
Ford Truck and SUV 2WD/4WD Applications	33-34
Import Truck and SUV Applications	34
Shock Fitment Guide	34
Belltech Lift & Lowering Struts	35

Components 34-47

Drop Spindles	38
Drop Ball Joints	38
I-Beams	39
Spring Spacers	39
Front Coil Springs	40-41
Rear Coil Springs	41
Leaf Springs	42
Lowering Block Kits	42
Hanger Kits	42-43
Shackle & Hanger Kits	43
Shackle Kits	44
Flip Kits & C-Section Kits	44-45
Bumpstops	41
Accessories	45
Airjack Suspension	46
Anti-Sway Bars	47

NOTES

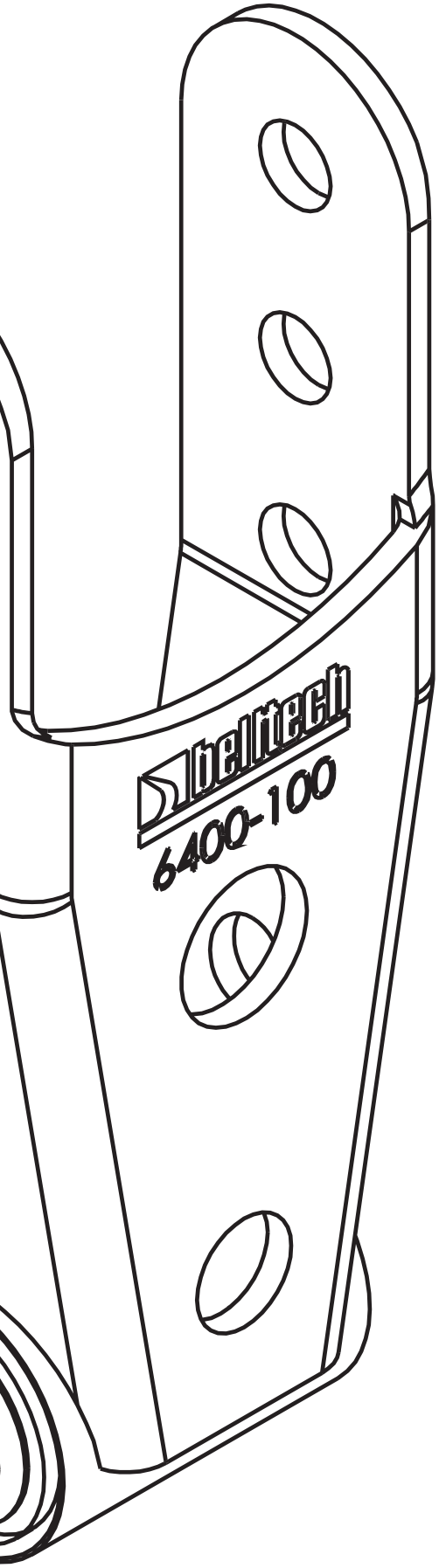

Belltech Complete Kits

New expanded line up for 2008

Belltech simplifies your purchase for lowering your vehicle by providing you the “Belltech Complete Kit”. The Complete Kit part number will provide you with all the necessary components you require to lower your truck or SUV.

For 2008 Belltech has expanded our Complete Kits line to include a wider range of popular truck applications. With the new applications and wider range, our engineers focused on the details of truly making each kit complete.

Here are just a few of the important details which make Belltech Kits truly Complete:

- Shorter stroke or stock length shocks can be included in your Complete Kit
- Alignment Cams/Alignment Bushing are included to bring your vehicle back to factory alignment specifications
- Bump stops – manufacturered from OEM quality polyurethane foam, providing the proper absorption and compression rates, while maintaining load capacities

Ordering a “Complete Kit” is presented in 3 stages:

Stage 1 provides you with a kit number – ordering with this number will provide the Complete Kit without shock absorbers

Stage 2 (adding the letters “ND” to Stage 1) includes 4 Nitro Drop 2 shock absorbers with your Complete Kit

Stage 3 (adding the letters “SP” to Stage 1) includes 4 Street Performance shock absorbers with your Complete Kit

YEAR	MODEL	DESIRED LOWERING: Without shocks (FRONT)	DESIRED LOWERING: Lift / Lowering Strut Solutions (FRONT)	DESIRED LOWERING: Without shocks (REAR)	COMPLETE KIT #: Without shocks (STAGE1)	COMPLETE KIT #: Nitro Drop 2 (STAGE2)	COMPLETE KIT #: Street Perfor-mance (STAGE3)	FRONT Components: SPINDLE / BALL JOINT	FRONT Components: SPRINGS or KEYS	FRONT Components: LEVELING STRUTS	FRONT Components: ALIGNMENT KIT	REAR Components: SHACKLE SET	REAR Components: SHACKLE/HANGER	REAR Components: COIL SPRINGS	REAR Components: FLIP KIT	REAR Components: BLOCK KIT	REAR Components: LEAF SPRING	FOOTNOTES - (see foldout)
CHEVROLET / GMC Colorado/Canyon Applications																		
04+	Colorado / Canyon Std. Cab	1" or 2"	1" to 3"	3"	602		602SP		x	x						x		BM
	Z85 Suspension	2"	2" to 3"	3"	603		603SP	x		x						x		BM
	(coil spring equipped trucks only)	2"	2" to 3"	4"	604		604SP	x		x						x	x	AX, BM
		3" or 4"	3" to 5"	5"	605		605SP	x	x	x						x	x	AX, BM
04+	Colorado / Canyon Ext. & Quad cab	1" or 2"	1" to 3"	3"	608		608SP		x	x						x		BM
	Z85 Suspension	2"	2" to 3"	3"	609		609SP	x		x						x		BM
	(coil spring equipped trucks only)	2"	2" to 3"	4"	604		604SP	x		x						x	x	AX, BM
		3" or 4"	3" to 5"	5"	610		610SP	x	x	x						x	x	AX, BM
Kits with Street Performance front struts will add 0-1" lowering range - adjustable in 1/2" increments																		
CHEVROLET / GMC S-Series 2WD Applications																		
99-03	S10-Extreme Std. Cab	2"		2"	612	612ND	612SP	x								x		
99-03	S10-Extreme Ext. Cab	2"		2"	613	613ND	613SP	x								x		
94-03	S10 / S15	2"		3"	614	614ND	614SP	x								x		
	Std. Cab Pickup Only (4 Cyl.)	2"-3"		3"	615	615ND	615SP		x							x		
		2"-3"		4"	568	568ND	568SP		x							x	x	AN
		4"-5"		5"	616	616ND	616SP	x	x							x	x	AN
94-03	S10 / S15	2"		3"	617	617ND	617SP	x								x		
	Ext. Cab Pickup Only (4 Cyl.)	2"-3"		3"	618	618ND	618SP		x							x		
		2"-3"		4"	568	568ND	568SP		x							x	x	AN
		4"-5"		5"	619	619ND	619SP	x	x							x	x	AN
94-03	S10 / S15	2"-3"		3"	650	650ND	650SP		x							x		
	Std. Cab Pickup Only (6 Cyl.)	2"-3"		4"	574	574ND	574SP		x							x	x	AN
		4"-5"		5"	620	620ND	620SP	x	x							x	x	AN
94-03	S10 / S15	2"		3"	617	617ND	617SP	x								x		
	Ext. Cab Pickup Only (6 Cyl.)	2"-3"		3"	621	621ND	621SP		x							x		
		2"-3"		4"	574	574ND	574SP		x							x	x	AN
		4"-5"		5"	622	622ND	622SP	x	x							x	x	AN
82-93	S10 / S15 Pickup	2"		3"	614	614ND	614SP	x								x		
	Std. Cab Pickup Only (4 Cyl. & 6 Cyl.)	2"-3"		3"	615	615ND	615SP		x							x		
		2"-3"		4"	568	568ND	568SP		x							x	x	AN
		4"-5"		5"	616	616ND	616SP	x	x							x	x	AN
82-93	S10 / S15 Pickup	2"		3"	617	617ND	617SP	x								x		
	Ext. Cab Pickup Only (4 Cyl. & 6 Cyl.)	2"-3"		3"	618	618ND	618SP		x							x		
		2"-3"		4"	568	568ND	568SP		x							x	x	AN
		4"-5"		5"	619	619ND	619SP	x	x							x	x	AN
98-03	S-10 Blazer / Jimmy (6 Cyl.)	2"		3"	625	625ND	625SP	x								x		
		2"-3"		3"	627	627ND	627SP		x							x		
		2"-3"		4"	569	569ND	569SP		x							x	x	AN
		4"-5"		5"	628	628ND	628SP	x	x							x	x	AN
98-03	S-10 Blazer Extreme (6 cyl.)	2"		2"	629	629ND	629SP	x								x		
		2"		3"	625	625ND	625SP	x								x		AN
95-97	S-10 Blazer / Jimmy (4 Cyl.)	2"		3"	614	614ND	614SP	x								x		
		2"-3"		3"	615	615ND	615SP		x							x		
		2"-3"		4"	570	570ND	570SP		x							x	x	AN
		4"-5"		5"	631	631ND	631SP	x	x							x	x	AN
95-97	S-10 Blazer / Jimmy (6 Cyl.)	2"		3"	614	614ND	614SP	x								x		
		2"-3"		3"	650	650ND	650SP		x							x		
		2"-3"		4"	573	573ND	573SP		x							x	x	AN
		4"-5"		5"	633	633ND	633SP	x	x							x	x	AN
83-94	S-10 Blazer / Jimmy	2"		3"	614	614ND	614SP	x								x		
	(4 Cyl. & 6 Cyl.)	2"-3"		3"	615	615ND	615SP		x							x		
		2"-3"		4"	568	568ND	568SP		x							x	x	AN
		4"-5"		5"	634	634ND	634SP	x	x							x	x	AN
CHEVROLET / GMC S-Series 4WD Applications																		
82-04	S-10 / S-15 Pickup / Blazer	1"-3" Adj.		2"	635	635ND	635SP		x							x		
	(Exc. ZW-7 Option)	1"-3" Adj.		3"	636	636ND	636SP		x							x		
95-97	S-10 / S-15 Blazer	1"-3" Adj.		2"	635	635ND	635SP		x							x		
		1"-3" Adj.		3"	636	636ND	636SP		x							x		
91-93	Typhoon	1"-2"		2"	635	635ND	635SP		x							x		
All	Syclone	1"-2"		2"	635	635ND	635SP		x							x		
CHEVROLET / GMC Fullsize Truck 2WD Applications																		
1/2-TON FULL SIZE TRUCKS, BLAZERS & JIMMYS																		
07+	1/2-TON Silverado / Sierra / Denali	1" - 2" *		2" or 3"	640				x		x	x						BC
	Std. Cab short bed	2"		4"	641			x				x			x			AT
	(* front adj. in 1/2" increments)	1" or 2"*		4"	642				x		x	x			x			
			+1" to -2"	2" or 3"			645SP			x	x	x						BC
			+1" to -2"	4"			646SP			x	x	x			x			
			1"-4" *	5" or 6"			647SP	x		x	x				x			AT
Kits with Street Performance front struts will add 0-1" lowering range - adjustable in 1/2" increments																		
CHEVROLET / GMC Fullsize Truck 2WD Applications																		
1/2-TON FULL SIZE TRUCKS, BLAZERS & JIMMYS																		
07+	1/2-Ton Silverdo/Sierra	1" or 2"*		2" or 3"	649				x		x	x						BC
	Ext. Cab/Crew Cab only	2"		4"	641			x				x			x			AT
	(* front adj. in 1/2" increments)	1" or 2"*		4"	651				x		x	x			x			
			+1" to -2"	2" or 3"			645SP			x	x	x						BC
			+1" to -2"	4"			646SP			x	x	x			x			
			1"-4" *	5" or 6"			647SP	x		x	x				x			AT
Kits with Street Performance front struts will add 1" lift to 2" lowering range - adjustable in1/2" increments																		

YEAR	MODEL	DESIRED LOWERING: FRONT: Without shocks	DESIRED LOWERING: FRONT: Lift / Lowering Strut Solutions	DESIRED LOWERING: REAR: Without shocks	COMPLETE KIT #: STAGE1: Without shocks	COMPLETE KIT #: STAGE2: Nitro Drop 2	COMPLETE KIT #: STAGE3: Street Performance	FRONT Components: SPINDLE / BALL JOINT	FRONT Components: SPRINGS or KEYS	FRONT Components: LEVELING STRUTS	FRONT Components: ALIGNMENT KIT	REAR Components: SHACKLE SET	REAR Components: SHACKLE/HANGER	REAR Components: COIL SPRINGS	REAR Components: FLIP KIT	REAR Components: BLOCK KIT	REAR Components: LEAF SPRING	FOOTNOTES - (see foldout)
CHEVROLET / GMC Fullsize Truck 2WD Applications																		
1/2-TON FULL SIZE TRUCKS, BLAZERS & JIMMYS																		
05-06	1/2-Ton Silverado / Sierra	2"		3"	653	653ND	653SP	x					x					AT
2007	CLASSIC 1/2 Ton Silverado / Sierra	1"-2"		4"	654	654ND	654SP		x				x					AX,
	Std. Cab Short Bed only	2"		4"	655	655ND	655SP	x					x					AT,AX
		3"-4"		4"	656	656ND	656SP	x	x				x					AT,AX
		3"-4"		6"	657	657ND	657SP	x	x						x			AT,AG
05-06	1/2-TON Silverado / Sierra	2"		3"	658	658ND	658SP	x					x					AT
2007	CLASSIC 1/2 Ton Silverado / Sierra	1"-2"		4"	659	659ND	659SP		x				x					AX,
	Ext. Cab Short bed only	2"		4"	660	660ND	660SP	x					x					AT,AX
	(with factory equip. front torsion bar)	3"-4"		4"	661	661ND	661SP	x	x				x					AT,AX
		3"-4"		6"	662	662ND	662SP	x	x						x			AT,AH
01-06	1/2-TON Silverado / Sierra	2"		3"	653	653ND	653SP	x					x					AT
2007	CLASSIC 1/2 Ton Silverado / Sierra	2"-3"		3"	663	663ND	663SP		x				x					
	Std. Cab Short bed only	2"-3"		4"	664	664ND	664SP		x				x					AX
	(with factory equip. front coil spring)	4"-5"		6"	667	667ND	667SP	x	x						x			AT, AG
		4"-5"		6" or 7"	668	668ND	668SP	x	x			x			x			AT, AG
01-06	1/2-TON Silverado / Sierra	2"		3"	658	658ND	658SP	x					x					AT
2007	CLASSIC 1/2 Ton Silverado / Sierra	2"-3"		4"	670	670ND	670SP		x				x					AX
	Ext. Cab Short bed only	4"-5"		6"	671	671ND	672SP	x	x						x			AT,AH
	(with factory equip.front coil spring)	4"-5"		6" or 7"	672	672ND	672SP	x	x			x			x			AT,AH
04-06	1/2-TON Silverado / Sierra	3"		4"	673	673ND	673SP		x						x			AU, AX
2007	CLASSIC 1/2 Ton Silverado / Sierra	3"		4" or 5"	674	674ND	674SP	x	x						x			AT,AU,AX
	Crew Cab (4dr) only	4"-5"		6"	675	675ND	675SP	x	x						x			AT
		4"-5"		6" or 7"	676	676ND	676SP	x	x			x			x			AT
03-07	Silverado 1500 SS (2WD & AWD)	2"		2"	677		677SP		x			x						AZ,
		2"		2"	678		678SP	x				x						AT
2001	GMC Sierra C3	2"		2"	677		677SP		x			x						
02-04	Sierra Denali Ext. Cab only	2"		2"	678		678SP	x				x						AT
	.	2"		4"	655		655SP	x					x					AT
04-06	GMC Sierra Denali	2"		2"	677		677SP		x			x						
2007	CLASSIC	2"		2"	678		678SP	x				x						AT
	Crew Cab (4dr) only	2"		4"	679		679SP	x							x			AT
99-00	1/2-TON Silverado	2"		3"	653	653ND	653SP	x					x					AT
	Std. Cab Short Bed only	2"-3"		3"	663	663ND	663SP		x				x					
		2"		4"	655	655ND	655SP	x					x					AT,AX
		2"-3"		4"	664	664ND	664SP		x				x					AX
		4"-5"		6"	665	665ND	665SP	x	x						x			AG,AT
		4"-5"		6" or 7"	669	669ND	669SP	x	x			x			x			AG,AT
99-00	1/2-TON Silverado	2"		3"	658	658ND	658SP	x					x					AT
	Ext. Cab Short Bed only	2"		4"	660	660ND	660SP	x					x					AT,AX
		2"-3"		4"	670	670ND	670SP		x				x					AX
		4"-5"		6"	680	680ND	680SP	x	x						x			AT, AH
		4"-5"		6" or 7"	681	681ND	681SP	x	x			x			x			AT,AH
01-03	1500 HD 2WD/4WD	2"		4"	682	682ND	682SP	x					x					
	(8 lug rims-6 hole factory hanger)	1"-2"		4"	683	683ND	683SP		x				x					
	5" drop 2WD only	3"-4"		5"	684	684ND	684SP	x	x				x					BA
92-98	1/2-TON C-1500	2"		4"	685	685ND	685SP	x					x					AB
	Std. Cab only	2"-3"		4"	686	686ND	686SP		x				x					AB
	ALL EXCEPT: Ext. Cab and SS 454	4"-5"		6"	688	688ND	688SP	x	x						x			S,AB
	Coil drops rated for V8 engine only	4"-5"		6" or 7"	689	689ND	689SP	x	x			x			x			S,AB
88-98	1/2-TON C-1500	2"		4"	690	690ND	690SP	x					x					S,AB
	Ext. Cab only	2"-3"		4"	691	691ND	691SP		x				x					C,S,AB
	Coil drops rated for V8 engine only	4"-5"		6"	693	693ND	693SP	x	x						x			C,S,AB
		4"-5"		6" or 7"	694	694ND	694SP	x	x			x			x			C,S,AB
88-91	1/2-TON C-1500	2"		4"	695	695ND	695SP	x					x					AB
	Std. Cab only	2"-3"		4"	666	666ND	666SP		x		x		x					C,AB
	ALL EXCEPT: Ext. Cab and SS 454	4"-5"		6"	696	696ND	696SP	x	x		x				x			C,S,AB
	Coil drops rated for V8 eng. only	4"-5"		6" or 7"	697	697ND	697SP	x	x		x	x			x			C,S,AB
90-94	1/2-TON C-1500 SS-454 ONLY	1"-2"		4"	698	698ND	698SP		x				x					
		2"		4"	699	699ND	699SP	x					x					AB
		3"		4"	700	700ND	700SP	x	x				x					C,AB
		4"-5"		6"	701	701ND	702SP	x	x						x			C,S,AB
		4"-5"		6" or 7"	702	702ND	702SP	x	x			x			x			C,S,AB
73-87	1/2-TON C-10 Pickup	2"		4"	703	703ND	703SP		x				x					
	1" Rotor	3"		4"	704	704ND	704SP	x					x					AA
	Coil drops rated for 350 engine only	4"		6"	705	705ND	705SP	x	x						x			AA
73-87	1/2-TON C-10 Pickup	2"		4"	703	703ND	703SP		x				x					
	1-1/4" Rotor	3"		4"	706	706ND	706SP	x					x					AA
	Coil drops rated for 350 engine only	4"		6"	707	707ND	707SP	x	x						x			AA
71-72	1/2-TON C-Pickup	2"		3"	708	708ND	708SP		x					x				
	Coil drops rated for 350 engine only	4"		5"	709	709ND	709SP	x	x					x				
63-70	1/2-TON C-Pickup	2"		3"	710	710ND	710SP		x					x				
	Coil drops rated for 350 engine only	2"		4"	711	711ND	711SP		x					x				
3/4-TON FULL SIZE TRUCKS																		
99-00	2500 HD 2WD/4WD	2"		4"	682		682SP	x					x					
& 2004	(8 lug rims-6 hole factory hanger)	2"		4"	683		683SP		x				x					
	5" drop 2WD only	3"		5"	684		684SP	x	x				x					BA

YEAR	MODEL	DESIRED LOWERING: Without shocks (FRONT)	DESIRED LOWERING: Lift / Lowering Strut Solutions (FRONT)	DESIRED LOWERING: Without shocks (REAR)	COMPLETE KIT #: Without shocks (STAGE1)	COMPLETE KIT #: Nitro Drop 2 (STAGE2)	COMPLETE KIT #: Street Performance (STAGE3)	FRONT Components: SPINDLE / BALL JOINT	FRONT Components: SPRINGS or KEYS	FRONT Components: LEVELING STRUTS	FRONT Components: ALIGNMENT KIT	REAR Components: SHACKLE SET	REAR Components: SHACKLE/HANGER	REAR Components: COIL SPRINGS	REAR Components: FLIP KIT	REAR Components: BLOCK KIT	REAR Components: LEAF SPRING	FOOTNOTES - (see foldout)
3/4-TON FULL SIZE TRUCKS (cont.)																		
2002+	2500 HD 2WD/4WD	2"		4"-5"	712		712SP	x					x					
	(8 lug rims-8 hole factory hanger)	2"		4"-5"	713		713SP		x				x					
	5" drop 2WD only	3"		5"	714		714SP	x	x				x					
97-00	3/4 & 1-TON	2"		4"	715	715ND	715SP		x				x					A,E,AB
	Single Rear Wheel 8-LUG ONLY	3"		4"	716	716ND	716SP	x					x					E,AB
	and CREW CAB	4"-5"		8"	717	717ND	717SP	x	x						x			A,S,AB
97-00	3/4 C-2500 Ext. Cab & Crew Cab	2"		4"	718	718ND	718SP		x				x					A,E,AB
	99-00 Old Body Style	3"		4"	719	719ND	719SP	x					x					E,AB
		4"-5"		8"	717	717ND	717SP	x	x						x			A,S,AB
90-96	3/4 C-2500 Ext. Cab	2"		4"	720	720ND	720SP		x				x					A,E,AB
	Single rear wheels	3"		4"	721	721ND	721SP	x					x					E,AB
		4"-5"		8"	722	722ND	722SP	x	x						x			A,S,AB
88-98	3/4-TON C-2500	2"		4"	945	945ND	945SP		x				x					A,U,AB
	ALL EXCEPT: 8-LUG)	2"		4"	699	699ND	699SP	x					x					A,U,AB
		4"-5"		6" or 7"	702	702ND	702SP	x	x			x			x			A,C,U,S,AB
1-TON TRUCKS																		
02+	3500 HD Dually Ext. Cab 2WD/4WD	2"		3"-4"	723		723SP	x					x					
	(8 lug rims-10 hole factory hanger)	3"		5"	725		725SP	x	x				x					BA
97-00	1-TON SINGLE WHEEL	2"		4"	715	715ND	715SP		x				x					A,E,S,AB
	8-LUG.	4"-5"		8"	717	717ND	717SP	x	x						x			A,S,AB
97-00	1-TON C-3500 Std. Cab, Ext. Cab,	2"		4"	718	718ND	718SP		x				x					A,E,S,AB
	and Dually	3"		4"	719	719ND	719SP	x					x					E,S,AB
		4"-5"		8"	717	717ND	717SP	x	x						x			A,S,AB
97-00	1-TON C-3500 Crew Cab and Dually	2"		4"	715	715ND	715SP		x				x					A,E,S,AB
		3"		4"	716	716ND	716SP	x					x					E,S,AB
		4"-5"		8"	717	717ND	717SP	x	x						x			A,S,AB
92-96	1-TON C-3500 Crew Cab.	2"		4"	720	720ND	720SP		x				x					A,E,S,AB
		3"		4"	721	721ND	721SP	x					x					E,S,AB
		4"-5"		8"	722	722ND	722SP	x	x						x			A,S,AB
90-96	1-TON C-3500 Ext. Cab & Dually	3"		4"	721	721ND	721SP	x					x					E,S,AB
1989	1-TON C-3500 Ext. Cab & Dually	3"		4"	721	721ND	721SP	x					x					E,S,AB
		4"-5"		8"	722	722ND	722SP	x	x						x			A,C,K,S,AB
1988	1-TON C-3500 Ext. Cab & Dually	3"		4"	726	726ND	726SP	x					x					E,S,AB
		4"-5"		8"	727	727ND	727SP	x	x						x			A,C,K,S,AB
75-91	1-TON C-30 Crew Cab & Dually	3"		4"	728	728ND	728SP	x					x					
CHEVROLET / GMC Fullsize Truck 4WD Applications																		
07+	1/2-TON Silverado / Sierra / Denali	2"		2" or 3"	639			x				x						AT, BC
	ALL CABS		+1" to -2"	2" or 3"			645SP			x	x	x						BC
	(* front adj. in 1/2" increments)		+1" to -2"	4"			646SP			x	x	x			x			
Kits with Street Performance front struts will add 1" lift to 2" lowering range - adjustable in1/2" increments																		
99-06	1/2-TON Silverado ALL CABS	2"		2"	678		678SP	x				x						AT
88-98	Chevrolet / GMC 1/2 Ton Pickup	1"-3"		4"	730	730ND	730SP		x				x					
CHEVROLET / GMC SUV 2WD Applications																		
TAHOES, YUKONS, SUBURBANS & AVALANCHE																		
07+	Tahoe/Yukon/Suburban/Yukon XL	1"-2" *		3" or 4"	731				x		x			x				
	With Factory Auto Ride Shocks	2"		3" or 4"	732			x						x				AT
	(* front adj. in 1/2" increments)	3"-4" *		3" or 4"	733			x	x		x			x				AT
07+	Tahoe/Yukon	1"-2" *		3" or4"	734				x		x			x				
	Without Factory Auto Ride Shocks	2"		3" or 4"	735			x						x				AT
	(* front adj. in 1/2" increments)		+1" to -2"	2"			737SP			x	x			x				
			+1" to -2"	3" or 4"			738SP			x	x			x				
			+1" to -4"	3" or 4"			739SP	x		x	x			x				AT
07+	Suburban/Yukon XL	1"-2" *		3" or 4"	740				x		x			x				
	Without Factory Auto Ride Shocks	2"		3" or 4"	741			x						x				AT
	(* front adj. in 1/2" increments)		+1" to -2"	2"			743SP			x	x			x				
			+1" to -2"	3" or 4"			744SP			x	x			x				
			+1" to -4"	3" or 4"			745SP	x		x	x			x				AT
07+	Chevy Avalanche	1"-2" *		3"	746				x		x			x				
	Without Factory Auto Ride Shocks	2"		2" or 3"	747			x						x				AT
	(* front adj. in 1/2" increments)		+1" to -2"	2" or 3"			749SP			x	x			x				
			+1" to -4"	4" or 5"			745SP	x		x	x			x				AT
Kits with Street Performance front struts will add 1" lift to 2" lowering range - adjustable in1/2" increments																		
TRAIL BLAZER, ENVOY, SSR																		
02-06	Trail Blazer & Envoy 2WD-4WD		+1" to -2"	3"			796SP			x				x				AZ
		1"-2"		3"			21019											
02-06	SS Trail Blazer		+1" to -1.5"	OEM			797SP			x								
02-06	SSR	1.5"		2"	795				x					x				AZ
			+1" to -2"	2"			796SP			x				x				
Kits with Street Performance front struts will add 1" lift to 2" lowering range - adjustable in1/2" increments																		
TAHOES, YUKONS, SUBURBANS & AVALANCHE																		
00-06	Tahoe / Yukon / Suburban / Yukon XL	1"-2"		2"-3"	757				x					x				AR
	With Factory Premium Ride Shocks	2"		2"-3"	759			x						x				AT,AR
00-06	Tahoe / Yukon / Suburban / Yukon XL	1"-2"		2"	760	760ND	760SP		x					x				AQ
	Without Factory Premium Ride Shocks	1"-2"		3"-4"	757	757ND	757SP		x					x				AQ
		2"		3"-4"	759	759ND	759SP	x						x				AT,AQ
00-06	Chevy Avalanche Z66	1"-2"		1"-2"	757				x					x				AR
	With Factory Premium Ride Shocks	2"		1"-2"	759			x						x				AT,AR

YEAR	MODEL	DESIRED LOWERING: Without shocks (FRONT)	Lift / Lowering Strut Solutions (FRONT)	Without shocks (REAR)	COMPLETE KIT #: Without shocks (STAGE1)	Nitro Drop 2 (STAGE2)	Street Performance (STAGE3)	SPINDLE / BALL JOINT (FRONT Components)	SPRINGS or KEYS (FRONT Components)	LEVELING STRUTS (FRONT Components)	ALIGNMENT KIT (FRONT Components)	SHACKLE SET (REAR Components)	SHACKLE/HANGER (REAR Components)	COIL SPRINGS (REAR Components)	FLIP KIT (REAR Components)	BLOCK KIT (REAR Components)	LEAF SPRING (REAR Components)	FOOTNOTES - (see foldout)
TAHOES, YUKONS, SUBURBANS & AVALANCHE (cont.)																		
00-06	Chevy Avalanche	2"		2"-3"	761	761ND	761SP	x						x				AT,AQ
	Without Factory Premium Ride Shocks	1"-2"		4"	754	754ND	754SP		x					x				AQ
	(Including Z71)	1"-2"		4"-5"	757	757ND	757SP		x					x				AQ
		2"		4"	755	755ND	755SP	x						x				AT,AQ
		3"-4"		4"-5"	781	781ND	781SP	x	x					x				AT,AQ
95-99	Suburban	2"		4"	783	783ND	783SP		x			x					x	V, AB
	1/2-TON 2WD (6-LUG)	4"-5"		7"	784	784ND	784SP	x	x						x			S
95-98	Suburban	2"		3"	785	785ND	785SP		x								x	V, AB
	3/4 TON 2WD (6-LUG)	3"		4"	786	786ND	786SP	x	x			x					x	V, AB
92-94	Suburban	2"		4"	782	782ND	782SP	x				x					x	V, AB
	1/2-TON (2WD)	2"		4"	783	783ND	783SP		x			x					x	V, AB
		4"-5"		7"	787	787ND	787SP	x	x						x			V, AB
92-94	Suburban	2"		3"	785	785ND	785SP	x									x	V, AB
	3/4-TON 2WD (6 LUG)	4"-5"		7"	789	789ND	789SP	x	x						x			V, AB
95-99	Tahoe / Yukon 4 Door Only	2"-3"		4"	791	791ND	791SP		x				x					A, V, AB
		3"		4"	792	792ND	792SP	x	x				x					C, V, AB
95-99	Tahoe / Yukon 2 Door Only	4"-5"		5.5"	794	794ND	794SP	x	x						x			C, V, AB, AE
CADILLAC / CHEVROLET / GMC SUV 4WD Applications																		
07+	Escalade	2"		3"-4"	750			x						x				AT
	With Factory AutoRide Shocks		+1" to -2"	3" or 4"			752SP			x	x			x				
			+1" to -4"	3" or 4"			753SP	x		x	x			x				AT
07+	Tahoe/Yukon/Avalanche	2"		3"-4"	732			x						x				AT
	Surburban/Yukon XL	1"-2"		3"-4"	731				x		x			x				
	With Factory AutoRide Shocks		+1" to -2"	3" or 4"			752SP			x	x			x				
	(* front adj. in 1/2" increments)		+1" to -4"	3" or 4"			753SP	x		x	x			x				AT
07+	Tahoe/Yukon	2"		3"-4"	735			x						x				AT
	Without Factory AutoRide Shocks	1"-2"	1-2"	3"-4"	734				x		x			x				
	(* front adj. in 1/2" increments)		+1" to -2"	2"			737SP			x	x			x				
			+1" to -2"	3" or 4"			738SP			x	x			x				
			+1" to -4"	3" or 4"			739SP	x		x	x			x				AT
07+	Suburban/Yukon XL	2"		3"-4"	741			x						x				AT
	Without Factory AutoRide Shocks	1"-2"		3"-4"	740				x		x			x				
	(* front adj. in 1/2" increments)		+1" to -2"	2"			743SP			x	x			x				
			+1" to -2"	3" or 4"			744SP			x	x							
			+1" to -4"	3" or 4"			745SP	x		x	x			x				AT
07+	Chevy Avalanche		+1" to -2"	2"-3"			749SP			x	x			x				
	Without Factory AutoRide Shocks		+1" to -4"	4"-5"			745SP	x		x	x			x				AT
Kits with Street Performance front struts will add 1" lift to 2" lowering range - adjustable in1/2" increments																		
01-06	Escalade / Denali with AutoRide	1"-3"		3"	754				x					x				T
		2"		3"	755			x						x				AT
00-06	Chevy Avalanche Z66	1"-2"		2"-3"	757				x					x				
	With Factory Premium Ride Shocks	2"		2"-3"	759			x						x				AT
00-06	Chevy Avalanche	1"-2"		2"-3"	756	756ND	756SP		x					x				
	Without Factory Premium Ride Shocks Including Z71	2"		2"-3"	761	761ND	761SP	x						x				AT
00-06	Tahoe / Yukon / Suburban / Yukon XL	1"-2"		2"-3"	757				x					x				
	With Factory Premium Ride Shocks	2"		2"-3"	759			x						x				AT
00-06	Tahoe / Yukon / Suburban / Yukon XL	1"-2"		3"-4"	756	756ND	756SP		x					x				
	W/O Factory Premium Ride Shocks	2"		3"-4"	759	759ND	759SP	x						x				AT
95-99	Tahoe, Yukon, Escalade, Denali 4 door	1"-3"		4"	764	764ND	764SP		x				x					T,V
92-99	Suburban K-1500 only	1"-3"		4"	765	765ND	765SP		x			x	x					T
92-99	Tahoe, Yukon (2 door only)	1"-3"		3.5"	767	767ND	767SP		x								x	T
92-94	Blazer Full Size (4 door only)	1"-3"		4"	764	764ND	764SP		x				x					T
CHEVROLET / GMC Van Applications																		
95-02	Astro & Safari Van 2WD	2"		3.5"	768	768ND	768SP	x							x			L,X,AF
	With factory steel leaf springs	2.5"		3.5"	769	769ND	768SP		x						x			X,AF
		3"		3.5"	770	770ND	770SP	x	x						x			L,X,AF
85-95	Astro & Safari Van 2WD	2"		2.5"	771	771ND	771SP	x							x			L,AF
	With factory composite leaf springs	2.5"		2.5"	772	772ND	772SP		x						x			AF
CHEVROLET / GMC Car Applications																		
92-96	Caprice / Roadmaster Wagon	2"		2.75"	773	773ND	773SP	x						x				
92-96	Caprice / Roadmaster Sedan	2"		2.25"	774	774ND	774SP	x						x				
92-96	Impala SS	2"		1.5"	774	774ND	774SP	x						x				B
92-96	Impala SS (complete spring set)	1.5"		1.5"	775	775ND	775SP							x				
80-81	Buick Century	2"		1.5"	776	776ND	776SP	x						x				
80-87	El Camino, Sprint, Regal, GN	2"		1.5"	776	776ND	776SP	x						x				
80-87	Malibu, Monte Carlo S/S	2"		1.5"	776	776ND	776SP	x						x				
80-88	Olds Cutlass, 442, Salon	2"		1.5"	776	776ND	776SP	x						x				
82-86	Pontiac Bonneville,	2"		1.5"	776	776ND	776SP	x						x				
80-87	Grand Prix, Le Mans	2"		1.5"	776	776ND	776SP	x						x				
DODGE Truck and SUV Applications																		
DODGE DURANGO & DAKOTA																		
97-04	Dakota **ALL CABS**, (V8 only)	2"		4"	801	801ND	801SP		x				x					
97-04	Dakota **ALL CABS**, (V6 only)	2"		4"	802	802ND	802SP		x				x					
97-04	Dakota R/T	1"		2"	803	803ND	803SP		x				x					AP
91-96	Dakota Std. Cab (V8 only)	2"		4"	804	804ND	804SP	x					x					AC
		2"		4"	805	805ND	805SP		x				x					AC
87-90	Dakota Std. Cab (V8 only)	2"		4"	807	807ND	807SP	x					x					AC
		2"		4"	808	808ND	808SP		x				x					AC

YEAR	MODEL	DESIRED LOWERING: Without shocks (FRONT)	DESIRED LOWERING: Lift / Lowering Strut Solutions (FRONT)	DESIRED LOWERING: Without shocks (REAR)	COMPLETE KIT #: Without shocks (STAGE1)	COMPLETE KIT #: Nitro Drop 2 (STAGE2)	COMPLETE KIT #: Street Perfor-mance (STAGE3)	FRONT Components: SPINDLE / BALL JOINT	FRONT Components: SPRINGS or KEYS	FRONT Components: LEVELING STRUTS	FRONT Components: ALIGNMENT KIT	REAR Components: SHACKLE SET	REAR Components: SHACKLE/HANGER	REAR Components: COIL SPRINGS	REAR Components: FLIP KIT	REAR Components: BLOCK KIT	REAR Components: LEAF SPRING	FOOTNOTES - (see foldout)
DODGE RAM																		
06-07	Dodge Ram 1500 Std. & Quad Cab	2"		5"	810	810ND	810SP		x						x			
02-05	Dodge Ram 1500 Std. Cab	2"		5"	811	811ND	811SP		x		x				x			
02-05	Dodge Ram 1500 Quad Cab	2"		5"	812	812ND	812SP		x		x				x			
94-99	Dodge Ram 1500 Std. Cab	2"		4"	813	813ND	813SP	x					x					R
	Auto Trans V-8 only	2"-3"		4"	814	814ND	814SP		x				x					R
	ALL EXCEPT: Long Beds	4"-5"		6" or 7"	817	817ND	817SP	x	x			x			x			R
94-99	Dodge Ram 1500 Ext. Cab	2"		4"	818	818ND	818SP	x					x					R
	Auto Trans V-8 only	2"-3"		4"	819	819ND	819SP		x				x					R
	ALL EXCEPT: Long Beds	4"-5"		6" or 7"	822	822ND	822SP	x	x			x			x			R
DODGE RAM 3/4 & 1 TON TRUCK																		
94-00	Dodge Ram 2500 V10 & Diesel	3"		4"	823	823ND	823SP		x				x					
94-00	Dodge Ram 3500 V10 & Diesel	3"		4"	824	824ND	824SP		x				x					
FORD Truck and SUV 2WD Applications																		
RANGER																		
98-03	Ford Ranger Std. & Ext. Cab	3"		3"	900	900ND	900SP		x		x						x	AL
89-97	Ford Ranger Std. Cab	2"		2"	901	901ND	901SP		x				x					
		2"		4"	902	902ND	902SP		x				x					
		3"		4"	903	903ND	903SP	x					x					J
89-97	Ford Ranger Ext. Cab	2"		2"	901	901ND	901SP		x				x					
		2"		4"	904	904ND	904SP		x				x					
		3"		4"	905	905ND	905SP	x					x					J
1/2-TON TRUCKS F-150																		
04+	Ford F-150 2WD All Cabs	3"		5"	907				x						x			AZ
		2"-3"		5"	908				x						x			AZ
		2"		5"	909			x							x			BB
		2"-4"		5"	910			x		x					x			BB
			1" to 4"	5"			911SP	x		x					x			BB
			+1" to -3"	2"			912SP			x		x						
			+1" to -3"	3"			913SP			x							x	
			+1" to -3"	5"			914SP			x					x			
	Kits with Street Performance front struts will add a 1" lift to 3" lowering range - adjustable in1/2" increments																	
97-03	Ford F150, F250 Light Duty	2"		4"	915	915ND	915SP	x					x					AV
	Std. Cab, Ext. Cab	2"-3"		4"	917	917ND	917SP		x				x					AJ
	Coil drops rated for V8 only	4"-5"		6"	918	918ND	918SP	x	x		x				x			AV
97-03	Ford F150 Super Crew	2"		4"	915	915ND	915SP	x					x					AV
		2"-3"		4"	917	917ND	917SP		x				x					AJ
	Coil drops rated for V8 only	4"-5"		6"	919	919ND	919SP	x	x		x				x			AV
97-03	Ford Lightning	1"		2"	920	920ND	920SP		x		x	x						AM,AP,AJ
		2"		3"	921	921ND	921SP	x				x	x					AV,AM,AP
97-03	Ford Harley Series	2"		3"	921	921ND	921SP	x				x	x					AV,AM,AP
		2"		3"	923	923ND	923SP		x		x	x	x					AM,AP,AJ
87-96	Ford F-150 Std. Cab	2"		4"	924	924ND	924SP		x				x					
87-96	Ford F-150 Ext. Cab	2"		4"	926	926ND	926SP		x				x					
SUV																		
02-05	Ford Explorer	2"		2.5"	928				x					x				
03-05	Ford Expedition, Navigator (2WD)	2"		2"	929				x					x				
97-02	Ford Expedition, Navigator (2WD)	2"		2"	930	930ND	930SP		x					x				
	w/ factory equip. rear coil spring	2"		2"	931	931ND	931SP	x						x				AV
		2"		3"	932	932ND	932SP	x						x				AV
		3"		3"	934	934ND	934SP		x		x			x				
97-02	Ford Expedition, Navigator (2WD)	2"		2" or 3"	939	939ND	939SP		x									BG
	w/ factory equip. rear air spring	2"		2" or 3"	940	940ND	940SP	x										AV, BG
		3"		2" or 3"	941	941ND	941SP		x		x							BG
FORD Truck and SUV 4WD Applications																		
04+	Ford F-150 4WD All Cabs	2"		2" or 4"	933				x			x						BC
			+2" to -2"	0" or 2"			944SP			x								BC,BD
			+2" to -2"	2" or 4"			935SP			x		x						BC
			+1" to -3"	3" or 5"			913SP			x							x	BC, BD
	Kits with Street Performance front struts will add a 2" lift to 2" lowering range - adjustable in1/2" increments																	
97-03	Ford F-150 All Cabs	1"-3"		3"	937	937ND	937SP		x		x	x	x					
		1"-3"		4"	938	938ND	938SP		x		x		x					
IMPORT Truck and SUV Applications																		
BMW																		
04+	BMW X3	1.4"-2.7"		1.2"-2.7"			21002	Complete kits include rear springs and shocks										
00+	BMW X5	1.4"-2.7"		1.4"-2.7"			21004	Complete kits include rear springs and shocks										
Honda																		
05+	Honda Ridgeline	1.4"-2.6"		1.4"-2.6"			21002	Complete Coilover kit										BF
Isuzu 2WD																		
96-03	Isuzu Hombre (6 Cyl.)	2"		2"	777	777ND	777SP		x							x		Q
		2"-3"		3"	650	650ND	650SP		x							x		Q
		2"		3"	614	614ND	614SP	x								x		Q
		4"-5"		5"	620	620ND	620SP	x	x							x	x	Q,AN
96-03	Isuzu Hombre (4 Cyl.)	2"-3"		3"	615	615ND	615SP		x							x		Q
		2"		3"	614	614ND	614SP	x								x		Q
		4"-5"		5"	619	619ND	619SP	x	x							x	x	Q,AN

YEAR	MODEL	DESIRED LOWERING: Without shocks (FRONT)	Lift / Lowering Strut Solutions (FRONT)	Without shocks (REAR)	COMPLETE KIT #: Without shocks (STAGE1)	Nitro Drop 2 (STAGE2)	Street Perfor-mance (STAGE3)	SPINDLE / BALL JOINT (FRONT Components)	SPRINGS or KEYS (FRONT Components)	LEVELING STRUTS (FRONT Components)	ALIGNMENT KIT (FRONT Components)	SHACKLE SET (REAR Components)	SHACKLE/HANGER (REAR Components)	COIL SPRINGS (REAR Components)	FLIP KIT (REAR Components)	BLOCK KIT (REAR Components)	LEAF SPRING (REAR Components)	FOOTNOTES - (see foldout)
Mazda																		
98-04	Mazda B-2300/3000/4000 All Cabs	3"		3"	**900**	**900ND**	**900SP**		x		x						x	AL,Y
94-97	Mazda B-2300/3000/4000 Std. Cab	3"		4"	**903**	**903ND**	**903SP**	x					x					J
94-97	Mazda B-2300/3000/4000 Ext. Cab	3"		4"	**905**	**905ND**	**905SP**	x					x					J
Mitsubishi																		
03+	Mitsubishi Outlander	0.9"-2.5"		0"-1.8"			**18015**	Complete kits include rear springs and shocks										
83-97	Mitsubishi Pickup Series	2.5"		3"	**436**	**436ND**	**436SP**		x							x		Q
Nissan																		
04+	Nissan Titan	2"		4"	**437**		**437SP**		x						x		x	AZ
			+2" to -2"	4"			**438SP**			x					x		x	
Kits with Street Performance front struts offer 2" lift to 2" lowering range - adjustable in1/2" increments																		
98-00	Nissan Frontier (all exc. crew cab)	2"		3"	**439**	**439ND**	**439SP**	x								x		M,Y
83-97	Nissan Pickup & Hardbody	2"		3"	**440**			x								x		M,Q,N
Porsche																		
02+	Porsche Cayenne, Cayenne S	1.4"-2.7"		1.4"-2.7"			**21018**	Complete kits include rear springs and shocks										BE
Toyota																		
2007+	Toyota Tundra	2"		4"	**441**				x						x			AZ
	All cabs-V8 only		+2" to -2"	4"			**442SP**			x					x			
Kits with Street Performance front struts offer 2" lift to 2" lowering range - adjustable in1/2" increments																		
96-02	Toyota Tacoma (6 Cyl.)	2"		3"	**443**				x							x		Q
84-95	Toyota Pickup	2"		3"	**444**	**444ND**	**444SP**	x								x		Q
Volkswagen																		
02+	Volkswagen Touareg	1.4"-2.7"		1.4"-2.5"			**21021**	Complete kits include rear springs and shocks										BE

Belltech Coilover Kits

Belltech coilovers offer a complete suspension solution for the front end of your truck or SUV. Consisting of a spring, performance shock with a threaded body, dust boot and rebound & compression dampening (on specific models) emcompassed in one unit. You have the flexibility to adjust your ride at any time.

- Up to 4" of lowering
- Application specific design
- Variable lowering range
- Performance handling increases through Belltech coilover setup
- Two variations of coilovers
- Stainless steel construction with Belltech by KW coilovers

(* adjustable compression on select models of Belltech by KW coilovers)

Year	Model	Desired Drop: Front	Desired Drop: Rear	BT coilover kits, Galvanized Struts, Fixed Dampening Rate: Front Struts only	BT coilover kits, Galvanized Struts, Fixed Dampening Rate: Front Struts & rear Shocks	BT coilover kits "made by KW", Inox-line (Stainless Steel), Fixed Dampening Rate: Front Struts only	BT coilover kits "made by KW", Inox-line (Stainless Steel), Fixed Dampening Rate: Front Struts & rear Shocks	BT coilover kits "made by KW", Inox-line (Stainless Steel), Adjustable Rebound and Compression Dampening: Front Struts & rear Shocks
BMW								
04+	BMW X3	1.4"-2.7"	1.2"-2.7"	N/A	N/A	N/A	N/A	21002 (BH)
00+	BMW X5	1.4"-2.7"	1.4"-2.7"	N/A	N/A	N/A	N/A	21004
CHEVROLET / GMC								
04'-07'	Colorado / Canyon (All Cabs)							
	With Factory Leaf Springs	0"-3"	(YY)	12001	13001	N/A	N/A	21003
	With Lowering Leaf Springs	0"-3"	(YY)	12001	13001	N/A	N/A	21001
02'-07'	SSR	1"-2"	2"	N/A	N/A	N/A	N/A	21020
02'-07	Trailblazer, Envoy	1"-2.5"	3"	N/A	N/A	N/A	N/A	21019
04+	2004+ SS Trailblazer (front coilovers only)	0"-1.25"	(BL)	NA	NA	N/A	N/A	21013 (BK,BL)
04+	2004+ SS Trailblazer (front coilovers w/rear V3 shocks)	0"-1.25"		NA	NA	N/A	N/A	21017 (BK,BL)
FORD								
04'-06'	Ford F-150 2 WD (Std., Ext., Crew & Super Crew Cab)	0"-3"	(YY)	12008	13008	14008	15008	21008
	Ford F-150 4 WD (Std., Ext., Crew & Super Crew Cab)	0"-4"	(YY)	12008	13008	14008	15008	21008
HONDA								
05+	Honda Ridgeline	1.4"-2.6"	1.4"-2.6"	N/A	N/A	N/A	N/A	21022 (BF)
LINCOLN								
02+	Lincoln Navigator (Only w/ IRS)	0"-2.75"	0"-2.75"	N/A	N/A	N/A	N/A	21012
MITSUBISHI								
03+	Mitsubishi Outlander	0.9"-2.5"	0"-1.8"	N/A	N/A	17015 (BI)	18015 (BI)	N/A
PORSCHE								
02+	Porsche Cayenne, Cayenne S	1.4"-2.7"	1.4"-2.7"	N/A	N/A	N/A	N/A	21018
VOLKSWAGEN								
02+	Volkswagen Touareg	1.4"-2.7"	1.4"-2.5"	N/A	N/A	N/A	N/A	21021

NOTES

Belltech Products by Manufacturer

The “Belltech Products by Manufacturer” section will you help locate specific components for that desired look of your vehicle. An optional 3 step process is provided to make ordering quick and easy.

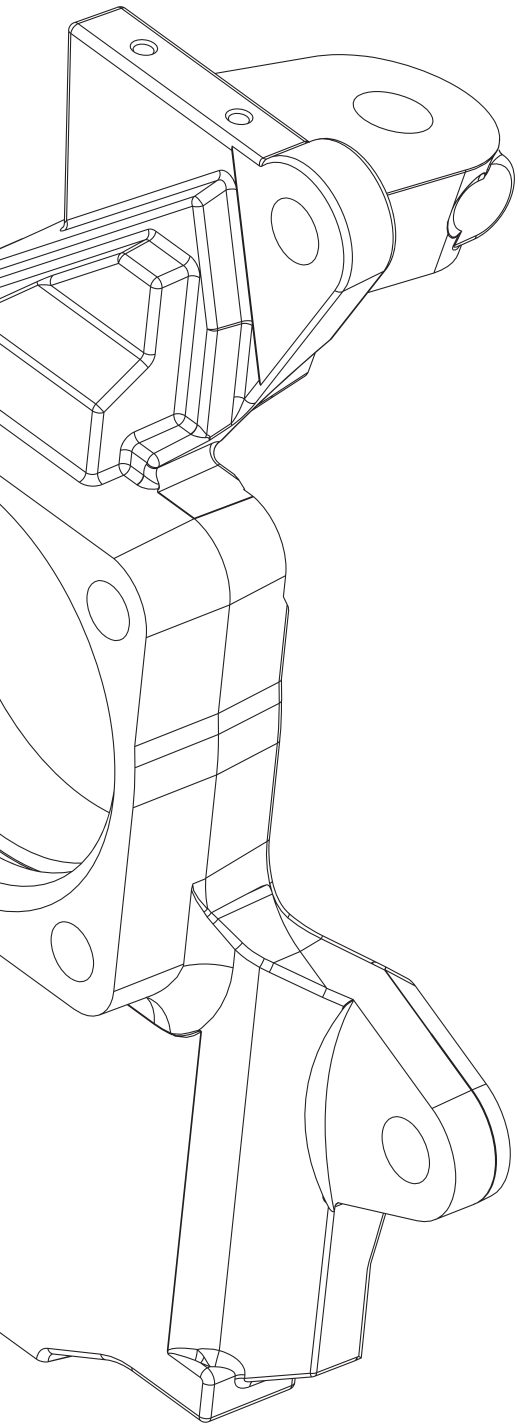

Chevrolet / GMC S-Series Applications	**14-15**
Colorado / Canyon	14-15
S-Series 2WD Applications	14-15
S-Series 4WD Applications	16-17
Chevrolet / GMC Fullsize Truck 2WD Applications	**16-17**
1/2-ton full size Trucks, Blazers & Jimmys	16-17
3/4-ton full size Trucks	18-19
1-ton Trucks	20-21
Chevrolet / GMC Fullsize Truck 4WD Applications	**20-21**
Chevrolet / GMC SUV 2WD Applications	**20-21**
Tahoes, Yukons, Suburbans & Avalanche	20-21
1-ton Trucks	20-21
Chevrolet / GMC Fullsize Truck 4WD Applications	**20-21**
Chevrolet / GMC SUV 2WD Applications	**20-21**
Tahoes, Yukons, Suburbans & Avalanche	20-21
Trail Blazer, Envoy, SSR	22-23
Chevrolet / GMC SUV 2WD Applications	**22-23**
Tahoes, Yukons, Suburbans & Avalanche	22-23
Cadillac/ Chevrolet / GMC SUV 4WD Applications	**22-23**
Trail Blazer, Envoy, SSR	22-23
Chevrolet / GMC SUV 2WD Applications	**22-23**
Tahoes, Yukons, Suburbans & Avalanche	22-23
Cadillac/ Chevrolet / GMC SUV 4WD Applications	**22-23**
Chevrolet / GMC Van Applications	**24-25**
Chevrolet / GMC Car Applications	**24-25**
Dodge Truck and SUV Applications	**24-25**
Dodge Durango & Dakota	24-25
Dodge Ram	24-25
Dodge Ram 3/4 & 1-ton Truck	26-27
Ford Truck and SUV 2WD Applications	**26-27**
Ranger	26-27
1/2-ton Trucks F-150	26-27
3/4-ton F-250 & 1-ton F-350 Trucks	26-27
SUV	26-27
Ford Truck and SUV 4WD Applications	**28-29**
Import Truck and SUV Applications	**28-29**
BMW	28-29
Honda	28-29
Isuzu	28-29
Mazda	28-29
Mitsubishi	28-29
Nissan	28-29
Porsche	28-29
Toyota	28-29
Volkswagen	28-29

		DESIRED LOWERING			STEP 1 - Lowering Components										
		FRONT		REAR	FRONT					REAR					
YEAR	MODEL	Without shocks	Leveling Strut Solutions	Without shocks	SET # LOWERING COMPONENTS	SPINDLES BALL JOINT	COIL SPRINGS or KEYS	LEVELING STRUTS	ALIGNMENT KIT	SHACKLE SET	SHACKLE HANGER KITS	COIL SPRINGS	FLIP KIT	BLOCK KIT	LEAF SPRING (/Sold Separately)
CHEVROLET / GMC Colorado/Canyon Applications															
04+	Colorado / Canyon - Std. Cab	0"		2"	6110									6110	
	Z85 Suspension		1" to 2"	3"	QR100		4201	25005						6210	
	(coil spring equipped trucks only)	1" or 2"	1" to 3"	2"	601		12203	25005						6110	
		1" or 2"	1" to 3"	3"	602		12203	25005						6210	
		2"	2" to 3"	3"	603	2103		25005						6210	
		2"		3"	QR101	2103									5953
		2"	2" to 3"	4"	604	2103		25005						6010	5953
		3" or 4"	3" to 5"	5"	605	2103	12203	25005						6110	5953
	BT coilover Kits refer to page 11	0" to 3"				Above front and rear parts could be added to coilover front struts									
04+	Colorado / Canyon	0"		2"	6110									6110	
	Ext. & Quad Cab		1" to 2"	3"	QR102		4205	25005						6210	
	Z85 Suspension	1" or 2"	1" to 3"	2"	607		12206	25005						6110	
	(coil spring equipped trucks only)	1" or 2"	1" to 3"	3"	608		12206	25005						6210	
		2"	2" to 3"	3"	609	2103		25005						6210	
		2"		3"	QR103	2103									5953
		2"	2" to 3"	4"	604	2103		25005						6010	5953
		3" or 4"	3" to 5"	5"	610	2103	12206	25005						6110	5953
	BT coilover Kits refer to page 11	0" to 3"				Above front and rear parts could be added to coilover front struts									
04+	Colorado / Canyon All Cabs w/ ZQ8 Suspension	2"		2"	611	2103								6110	
Kits with Street Performance front struts will add 0-1" lowering range - adjustable in 1/2" increments															
CHEVROLET / GMC S-Series 2WD Applications															
99-03	S10-Extreme - Std. Cab	2"		2"	612	2100								6100	
99-03	S10-Extreme - Ext. Cab	2"		2"	613	2100								6102	
94-03	S10 / S15	2"		2"	612	2100								6100	
	Std. Cab Pickup Only (4-Cyl.)	2"		3"	614	2100								6200	
		2"-3"		3"	615		23225							6200	
		2"-3"		4"	568		23325							6002	5954
		4"-5"		5"	616	2100	23225							6100	5954
94-03	S10 / S15	2"		2"	613	2100								6102	
	Ext. Cab Pickup Only (4-Cyl.)	2"		3"	617	2100								6202	
		2"-3"		3"	618		23225							6202	
		2"-3"		4"	568		23225							6002	5954
		4"-5"		5"	619	2100	23225							6102	5954
94-03	S10 / S15	2"		2"	612	2100								6100	
	Std. Cab Pickup Only (6-Cyl.)	2"		3"	614	2100								6200	
		2"-3"		3"	650		23227							6200	
		2"-3"		4"	574		23227							6002	5954
		4"-5"		5"	620	2100	23227							6100	5954
94-03	S10 / S15	2"		2"	613	2100								6102	
	Ext. Cab Pickup Only (6-Cyl.)	2"		3"	617	2100								6202	
		2"-3"		3"	621		23227							6202	
		2"-3"		4"	574		23227							6002	5954
		4"-5"		5"	622	2100	23227							6102	5954
82-93	S10 / S15 Pickup	2"		2"	612	2100								6100	
	Std. Cab Pickup Only (4 & 6-Cyl.)	2"		3"	614	2100								6200	
		2"-3"		3"	615		23225							6200	
		2"-3"		4"	568		23225							6002	5954
		4"-5"		5"	616	2100	23225							6100	5954
82-93	S10 / S15 Pickup	2"		2"	613	2100								6102	
	Ext. Cab Pickup Only (4 & 6-Cyl.)	2"		3"	617	2100								6202	
		2"		3"	623		4220							6202	
		2"-3"		3"	618		23225							6202	
		2"-3"		4"	568		23225							6002	5954
		4"-5"		5"	619	2100	23225							6102	5954
98-03	S-10 Blazer / Jimmy (6-Cyl.)	2"		2"	624	2102								6100	
		2"		3"	625	2102								6200	
		3"		3"	626	2102	4223							6200	
		2"-3"		3"	627		23228							6200	
		2"-3"		4"	569		23228							6002	5964
		4"-5"		5"	628	2102	23228							6100	5964
98-03	S-10 Blazer Extreme (6-Cyl.)	2"		2"	629	2102								6100	
		2"		3"	625	2102								6202	
95-97	S-10 Blazer / Jimmy (4-Cyl.)	2"		2"	612	2100								6100	
		2"		3"	614	2100								6200	
		2"		3"	630		4220							6200	
		2"-3"		3"	615		23225							6200	
		2"-3"		4"	570		23225							6002	5956
		4"-5"		5"	631	2100	23225							6100	5956
95-97	S-10 Blazer / Jimmy (6-Cyl.)	2"		2"	612	2100								6100	
		2"		3"	614	2100								6200	
		3"		3"	632	2100	4202							6200	
		2"-3"		3"	650		23227							6200	
		2"-3"		4"	573		23227							6002	5956
		4"-5"		5"	633	2100	23227							6100	5956
83-94	S-10 Blazer / Jimmy (4 & 6-Cyl.)	2"		2"	612	2100								6100	
		2"		3"	614	2100								6200	
		2"		3"	630		4220							6200	
		2"-3"		3"	615		23225							6200	
		2"-3"		4"	568		23225							6002	5954
		4"-5"		5"	634	2100	23225							6100	5954

Use black highlighted Set # to acquire all lowering components in Step 1

YEAR	MODEL	DESIRED LOWERING FRONT w/o Shocks ND2 & SP	DESIRED LOWERING FRONT Leveling Strut Solutions	DESIRED LOWERING REAR w/o Shocks ND2 & SP	STEP 2 - Shock Absorbers NITRO DROP 2 SHOCK SET	NITRO DROP 2 Single FRONT	NITRO DROP 2 Single REAR	STREET PERFORMANCE SHOCK SET	STREET PERFORMANCE Single FRONT	STREET PERFORMANCE Single REAR	STEP 3 - Swaybars SWAYBAR SET	Single FRONT	Single REAR	Footnotes- (See Foldout)
CHEVROLET / GMC Colorado/Canyon Applications														
04+	Colorado / Canyon - Std. Cab	0"		2"		NA	8530	9508	25005	2210iF	9900	5421	5521	BM
	Z85 Suspension		1" to 2"	3"				9508	25005	2210iF	9900	5421	5521	BM
	(coil spring equipped trucks only)	1" or 2"	1" to 3"	2"		NA	8530	9508	25005	2210iF	9900	5421	5521	BM
		1" or 2"	1" to 3"	3"		NA	8530	9508	25005	2210iF	9900	5421	5521	BM
		2"	2" to 3"	3"		NA	8530	9508	25005	2210iF	9900	5421	5521	BM
		2"		3"		NA	8525	9507	25005	2208iF	9900	5421	5521	BM
		2"	2" to 3"	4"		NA	8525	9507	25005	2208iF	9900	5421	5521	AX, BM
		3" or 4"	3" to 5"	5"		NA	8525	9507	25005	2208iF	9900	5421	5521	AX, BM
	BT coilover Kits refer to page 11	0" to 3"												BM
04+	Colorado / Canyon	0"		2"		NA	8530	9508	25005	2210iF	9900	5421	5521	BM
	Ext. & Quad Cab		1" to 2"	3"				9508	25005	2210iF	9900	5421	5521	BM
	Z85 Suspension	1" or 2"	1" to 3"	2"		NA	8530	9508	25005	2210iF	9900	5421	5521	BM
	(coil spring equipped trucks only)	1" or 2"	1" to 3"	3"		NA	8530	9508	25005	2210iF	9900	5421	5521	BM
		2"	2" to 3"	3"		NA	8530	9508	25005	2210iF	9900	5421	5521	BM
		2"		3"		NA	8525	9507	25005	2208iF	9900	5421	5521	BM
		2"	2" to 3"	4"		NA	8525	9507	25005	2208iF	9900	5421	5521	AX, BM
		3" or 4"	3" to 5"	5"		NA	8525	9507	25005	2208iF	9900	5421	5521	AX, BM
	BT coilover Kits refer to page 11	0" to 3"												BM
04+	Colorado / Canyon All Cabs w/ ZQ8 Suspension	2"		2"		NA	8530	9508	25005	2210iF	9900	5421	5521	BM
	#25005 front strut offers 0 to 1" lowering range in 1/2" increments													
CHEVROLET / GMC S-Series 2WD Applications														
99-03	S10-Extreme - Std. Cab	2"		2"	9124	8017	8502	9524	10102K	2412iF	9901	5420	5520	
99-03	S10-Extreme - Ext. Cab	2"		2"	9124	8017	8502	9524	10102K	2412iF	9901	5420	5520	
94-03	S10 / S15	2"		2"	9124	8017	8502	9524	10102K	2412iF	9901	5420	5520	
	Std. Cab Pickup Only (4-Cyl.)	2"		3"	9124	8017	8502	9524	10102K	2412iF	9901	5420	5520	
		2"-3"		3"	9117	8007	8502	9517	10101K	2412iF	9901	5420	5520	
		2"-3"		4"	9116	8007	8530	9516	10101K	2410iF	9901	5420	5520	AN
		4"-5"		5"	9116	8007	8530	9516	10101K	2410iF	9901	5420	5520	AN
94-03	S10 / S15	2"		2"	9124	8017	8502	9524	10102K	2412iF	9901	5420	5520	
	Ext. Cab Pickup Only (4-Cyl.)	2"		3"	9124	8017	8502	9524	10102K	2412iF	9901	5420	5520	
		2"-3"		3"	9117	8007	8502	9517	10101K	2412iF	9901	5420	5520	
		2"-3"		4"	9116	8007	8530	9516	10101K	2410iF	9901	5420	5520	AN
		4"-5"		5"	9116	8007	8530	9516	10101K	2410iF	9901	5420	5520	AN
94-03	S10 / S15	2"		2"	9124	8017	8502	9524	10102K	2412iF	9901	5420	5520	
	Std. Cab Pickup Only (6-Cyl.)	2"		3"	9124	8017	8502	9524	10102K	2412iF	9901	5420	5520	
		2"-3"		3"	9117	8007	8502	9517	10101K	2412iF	9901	5420	5520	
		2"-3"		4"	9116	8007	8530	9516	10101K	2410iF	9901	5420	5520	AN
		4"-5"		5"	9116	8007	8530	9516	10101K	2410iF	9901	5420	5520	AN
94-03	S10 / S15	2"		2"	9124	8017	8502	9524	10102K	2412iF	9901	5420	5520	
	Ext. Cab Pickup Only (6-Cyl.)	2"		3"	9124	8017	8502	9524	10102K	2412iF	9901	5420	5520	
		2"-3"		3"	9117	8007	8502	9517	10101K	2412iF	9901	5420	5520	
		2"-3"		4"	9116	8007	8530	9516	10101K	2410iF	9901	5420	5520	AN
		4"-5"		5"	9116	8007	8530	9516	10101K	2410iF	9901	5420	5520	AN
82-93	S10 / S15 Pickup	2"		2"	9124	8017	8502	9524	10102K	2412iF	9901	5420	5520	
	Std. Cab Pickup Only (4 & 6-Cyl.)	2"		3"	9124	8017	8502	9524	10102K	2412iF	9901	5420	5520	
		2"-3"		3"	9117	8007	8502	9517	10101K	2412iF	9901	5420	5520	
		2"-3"		4"	9116	8007	8530	9516	10101K	2410iF	9901	5420	5520	AN
		4"-5"		5"	9116	8007	8530	9516	10101K	2410iF	9901	5420	5520	AN
82-93	S10 / S15 Pickup	2"		2"	9124	8017	8502	9524	10102K	2412iF	9901	5420	5520	
	Ext. Cab Pickup Only (4 & 6-Cyl.)	2"		3"	9124	8017	8502	9524	10102K	2412iF	9901	5420	5520	
		2"		3"	9117	8007	8502	9517	10101K	2412iF	9901	5420	5520	
		2"-3"		3"	9117	8007	8502	9517	10101K	2412iF	9901	5420	5520	
		2"-3"		4"	9116	8007	8530	9516	10101K	2410iF	9901	5420	5520	AN
		4"-5"		5"	9116	8007	8530	9516	10101K	2410iF	9901	5420	5520	AN
98-03	S-10 Blazer / Jimmy (6-Cyl.)	2"		2"	9124	8017	8502	9524	10102K	2412iF	95-03 Blazers 2-Door models use 9922 4 Door models use 9923			AN
		2"		3"	9124	8017	8502	9524	10102K	2412iF				
		3"		3"	9117	8007	8502	9517	10101K	2412iF	9922	5420	5522	
		2"-3"		3"	9117	8007	8502	9517	10101K	2412iF	9923	5420	5523	
		2"-3"		4"	9116	8007	8530	9516	10101K	2410iF				
		4"-5"		5"	9116	8007	8530	9516	10101K	2410iF				AN
98-03	S-10 Blazer Extreme (6-Cyl.)	2"		2"	9124	8017	8502	9524	10102K	2412iF	9922	5420	5522	
		2"		3"	9124	8017	8502	9524	10102K	2412iF	9923	5420	5523	
95-97	S-10 Blazer / Jimmy (4-Cyl.)	2"		2"	9124	8017	8502	9524	10102K	2412iF				
		2"		3"	9124	8017	8502	9524	10102K	2412iF	9922	5420	5522	
		2"		3"	9117	8007	8502	9517	10101K	2412iF	9923	5420	5523	
		2"-3"		3"	9117	8007	8502	9517	10101K	2412iF				
		2"-3"		4"	9116	8007	8530	9516	10101K	2410iF				AN
		4"-5"		5"	9116	8007	8530	9516	10101K	2410iF				AN
95-97	S-10 Blazer / Jimmy (6-Cyl.)	2"		2"	9124	8017	8502	9524	10102K	2412iF				
		2"		3"	9124	8017	8502	9524	10102K	2412iF	9922	5420	5522	
		3"		3"	9117	8007	8502	9517	10101K	2412iF	9923	5420	5523	
		2"-3"		3"	9117	8007	8502	9517	10101K	2412iF				
		2"-3"		4"	9116	8007	8530	9516	10101K	2410iF				AN
		4"-5"		5"	9116	8007	8530	9516	10101K	2410iF				AN
83-94	S-10 Blazer / Jimmy (4 & 6-Cyl.)	2"		2"	9124	8017	8502	9524	10102K	2412iF	9902	5420	5524	
		2"		3"	9124	8017	8502	9524	10102K	2412iF	9902	5420	5524	
		2"		3"	9117	8007	8502	9517	10101K	2412iF	9902	5420	5524	
		2"-3"		3"	9117	8007	8502	9517	10101K	2412iF	9902	5420	5524	
		2"-3"		4"	9116	8007	8530	9516	10101K	2410iF	9902	5420	5524	AN
		4"-5"		5"	9116	8007	8530	9516	10101K	2410iF	9902	5420	5524	AN

		DESIRED LOWERING			STEP 1 - Lowering Components										
		FRONT		REAR	FRONT					REAR					
YEAR	MODEL	Without shocks	Leveling Strut Solutions	Without shocks	SET # LOWERING COMPONENTS	SPINDLES BALL JOINT	COIL SPRINGS or KEYS	LEVELING STRUTS	ALIGNMENT KIT	SHACKLE SET	SHACKLE HANGER KITS	COIL SPRINGS	FLIP KIT	BLOCK KIT	LEAF SPRING (/Sold Separately)
CHEVROLET / GMC S-Series 4WD Applications															
82-04	S-10 / S-15 Pickup	1"-3" Adj.		2"	635		3922							6100	
82-94	Blazer	1"-3" Adj.		3"	636		3922							6200	
	(Exc. ZW-7 Option)	1"-3" Adj.		3"	637		3922								5954
95-97	S-10 / S-15 Blazer	1"-3" Adj.		2"	635		3922							6100	
		1"-3" Adj.		3"	636		3922							6200	
		1"-3" Adj.		3"	638		3922								5956
91-93	Typhoon	1"-2"		2"	635		3922							6100	
All	Syclone	1"-2"		2"	635		3922							6100	
CHEVROLET / GMC Fullsize Truck 2WD Applications															
1/2-TON FULL SIZE TRUCKS, BLAZERS & JIMMYS															
07+	1/2-TON Silverado / Sierra	0"		2" or 3"	6401					6401					
	Std. Cab short bed	2"		2" or 3"	639	2509				6401					
	(* front adj. in 1/2" increments)	1" - 2" *		2" or 3"	640		12464		4955	6401					
		2"		4"	641	2509				6700			6521		
		1" or 2" *		4"	642		12464		4955	6700			6521		
		3" - 4" *		5" or 6"	643	2509	12464		4955				6521		
		3 "- 4" *		7"	644	2509	12464		4955				6522		
			+1" to -2"	2" or 3"	QR104			25003	4955	6401					
			+1" to -2"	4"	QR105			25003	4955	6700			6521		
			1"-4" *	5" or 6"	QR106	2509		25003	4955				6521		
			1"-4" *	7"	QR107	2509		25003	4955				6522		
07+	1/2-Ton Silverdo / Sierra / Denali	0"		2" or 3"	6401					6401					
	Ext. Cab/Crew Cab only	2"		2" or 3"	639	2509				6401					
	(* front adj. in 1/2" increments)	1" or 2" *		2" or 3"	649		12463		4955	6401					
		2"		4"	641	2509				6700			6521		
		1" or 2" *		4"	651		12463		4955	6700			6521		
		3" or 4" *		5" or 6"	652	2509	12463		4955				6521		
			+1" to -2"	2" or 3"	QR104			25003	4955	6401					
			+1" to -2"	4"	QR105			25003	4955	6700			6521		
			1"-4" *	5" or 6"	QR106	2509		25003	4955				6521		
Kits with Street Performance front struts will add 1" lift to 2" lowering range - adjustable in1/2" increments.															
05-06	1/2-TON Silverado / Sierra	0"		2"	6400					6400					
2007	CLASSIC 1/2 Ton Silverado	2"		3"	653	2508					6511				
	Std. Cab short bed	2"		3"	QR108	2508									5952
	(w/ factory front torsion bar)	1"-2"		3"	QR109		3921								5952
		1"-2"		4"	654		3921				6512				
		2"		4"	655	2508					6512				
		3"-4"		4"	656	2508	3921				6512				
		3"-4"		6"	657	2508	3921						6616		
05-06	1/2-TON Silverado	0"		2"	6400					6400					
2007	CLASSIC 1/2 Ton Silverado	2"		3"	658	2508					6515				
	Ext. Cab short bed only	2"		3"	QR108	2508									5952
	(w/ factory front torsion bar)	1"-2"		3"	QR109		3921								5952
		1"-2"		4"	659		3921				6514				
		2"		4"	660	2508					6514				
		3"-4"		4"	661	2508	3921				6514				
		3"-4"		6"	662	2508	3921						6618		
01-06	1/2-TON Silverado / Sierra	0"		2"	6400					6400					
2007	CLASSIC 1/2 Ton Silverado	2"		3"	653	2508					6511				
	Std. Cab short bed only	2"		3"	QR108	2508									5952
	(w/ factory front coil spring)	2"-3"		3"	663		23408				6511				
		2"-3"		4"	664		23408				6512				
		3"		4"	QR110	2508	4302				6512				
		4"-5"		6"	667	2508	23408						6616		
		5"		7"	QR111	2508	4408			6700			6616		
		4"-5"		6" or 7"	668	2508	23408			6700			6616		
01-06	1/2-TON Silverado	0"		2"	6400					6400					
2007	CLASSIC 1/2 Ton Silverado	2"		3"	658	2508					6515				
	Ext. Cab short bed only	2"		3"	QR108	2508									5952
	(w/ factory front coil spring)	2"-3"		3"	QR112		23458								5952
		2"-3"		3"	QR113		23458				6515				
		2"-3"		4"	670		23458				6514				
		4"-5"		6"	671	2508	23458						6618		
		5"		7"	QR114	2508	4458			6700			6618		
		4"-5"		6" or 7"	672	2508	23458			6700			6618		
04-06	1/2-TON Silverado / Sierra	0"		2"	6400					6400					
2007	CLASSIC 1/2 Ton Silverado	3"		4"	673		23458						6519		
	Crew Cab (4dr)	3"		4" or 5"	674	2508	4454						6519		
		4"-5"		6"	675	2508	23458						6616		
		4"-5"		6" or 7"	676	2508	23458			6700			6616		
03-07	Silverado SS 1500 (2WD & AWD)	0"		2"	6400					6400					
		2"		2"	677		3921			6400					
		2"		2"	678	2508				6400					
2001	GMC Sierra C3	0"		2"	6400					6400					
02-04	Sierra Denali	2"		2"	677		3921			6400					
	Ext. Cab Only	2"		2"	678	2508				6400					
		2"		4"	655	2508					6512				
04-06	GMC Sierra Denali			2"	6400					6400					
2007	Classic Sierra Denali	2"		2"	677		3921			6400					
	Crew Cab (4dr) only	2"		2"	678	2508				6400					
		2"		4"	679	2508							6519		

Use black highlighted Set # to acquire all lowering components in Step 1

YEAR	MODEL	DESIRED LOWERING FRONT w/o Shocks ND2 & SP	DESIRED LOWERING FRONT Leveling Strut Solutions	DESIRED LOWERING REAR w/o Shocks ND2 & SP	STEP 2 - Shock Absorbers NITRO DROP 2 SHOCK SET	NITRO DROP 2 Single FRONT	NITRO DROP 2 Single REAR	STREET PERFORMANCE SHOCK SET	STREET PERFORMANCE Single FRONT	STREET PERFORMANCE Single REAR	STEP 3 - Swaybars SWAYBAR SET	Single FRONT	Single REAR	Footnotes- (See Foldout)
CHEVROLET / GMC S-Series 4WD Applications														
82-04	S-10 / S-15 Pickup	1"-3" Adj.		2"	9156	8520	8502	9556	2105DD	2412iF			5520	
82-94	Blazer	1"-3" Adj.		3"	9156	8520	8502	9556	2105DD	2412iF			5520	
	(Exc. ZW-7 Option)	1"-3" Adj.		3"	9155	8520	8530	9555	2105DD	2410iF			5520	T, Adj.
95-97	S-10 / S-15 Blazer	1"-3" Adj.		2"	9156	8520	8502	9556	2105DD	2412iF				
		1"-3" Adj.		3"	9156	8520	8502	9556	2105DD	2412iF				
		1"-3" Adj.		3"	9155	8520	8530	9555	2105DD	2410iF				T, Adj.
91-93	Typhoon	1"-2"		2"	9156	8520	8502	9556	2105DD	2412iF	9903	5424	5525	
All	Syclone	1"-2"		2"	9156	8520	8502	9556	2105DD	2412iF	9925	5424	5520	
CHEVROLET / GMC Fullsize Truck 2WD Applications														
1/2-TON FULL SIZE TRUCKS, BLAZERS & JIMMYS														
07+	1/2-TON Silverado / Sierra	0"		2" or 3"			8504	9504	25003	2212FF		5407		BC
	Std. Cab short bed	2"		2" or 3"			8504	9504	25003	2212FF		5407		AT, BC
	(* front adj. in 1/2" increments)	1" - 2" *		2" or 3"			8504	9504	25003	2212FF		5407		BC
		2"		4"			8504	9504	25003	2212FF		5407		AT
		1" or 2"*		4"			8504	9504	25003	2212FF		5407		
		3" - 4" *		5" or 6"			8510	9503	25003	2210FF		5407		AT
		3 "- 4" *		7"			8510	9503	25003	2210FF		5407		AT
			+1" to -2"	2" or 3"				9504	25003	2212FF		5407		BC
			+1" to -2"	4"				9504	25003	2212FF		5407		
			1"-4" *	5" or 6"				9503	25003	2210FF		5407		AT
			1"-4" *	7"				9503	25003	2210FF		5407		AT
07+	1/2-Ton Silverado / Sierra / Denali	0"		2" or 3"			8504	9504	25003	2212FF		5407		BC
	Ext. Cab/Crew Cab only	2"		2" or 3"			8504	9504	25003	2212FF		5407		AT, BC
	(* front adj. in 1/2" increments)	1" or 2"*		2" or 3"			8504	9504	25003	2212FF		5407		BC
		2"		4"			8504	9504	25003	2212FF		5407		AT
		1" or 2"*		4"			8504	9504	25003	2212FF		5407		
		3" or 4"*		5" or 6"			8510	9503	25003	2210FF		5407		AT
			+1" to -2"	2" or 3"				9504	25003	2212FF		5407		BC
			+1" to -2"	4"				9504	25003	2212FF		5407		
			1"-4" *	5" or 6"				9503	25003	2210FF		5407		AT
05-06	1/2-TON Silverado / Sierra	0"		2"	9112	8521	8504	9512	310400	2212FF	9924	5406	5502	
2007	CLASSIC 1/2 Ton Silverado	2"		3"	9112	8521	8504	9512	310400	2212FF	9924	5406	5502	AT
	Std. Cab short bed	2"		3"	9112	8521	8504	9512	310400	2212FF	9924	5406	5502	AT
	(w/ factory front torsion bar)	1"-2"		3"	9112	8521	8504	9512	310400	2212FF	9924	5406	5502	
		1"-2"		4"	9112	8521	8504	9512	310400	2212FF	9924	5406	5502	AX
		2"		4"	9112	8521	8504	9512	310400	2212FF	9924	5406	5502	AT,AX
		3"-4"		4"	9112	8521	8504	9512	310400	2212FF	9924	5406	5502	AT,AX
		3"-4"		6"	9111	8521	8510	9511	310400	2209FF	9924	5406	5502	AT,AG
05-06	1/2-TON Silverado	0"		2"	9112	8521	8504	9512	310400	2212FF	9924	5406	5502	
2007	CLASSIC 1/2 Ton Silverado	2"		3"	9112	8521	8504	9512	310400	2212FF	9924	5406	5502	AT
	Ext. Cab short bed only	2"		3"	9112	8521	8504	9512	310400	2212FF	9924	5406	5502	AT
	(w/ factory front torsion bar)	1"-2"		3"	9112	8521	8504	9512	310400	2212FF	9924	5406	5502	
		1"-2"		4"	9112	8521	8504	9512	310400	2212FF	9924	5406	5502	AX,
		2"		4"	9112	8521	8504	9512	310400	2212FF	9924	5406	5502	AT,AX
		3"-4"		4"	9112	8521	8504	9512	310400	2212FF	9924	5406	5502	AT,AX
		3"-4"		6"	9111	8521	8510	9511	310400	2209FF	9924	5406	5502	AT,AH
01-06	1/2-TON Silverado / Sierra	0"		2"	9141	8014	8504	9541	10104i	2212FF	9904	5402	5502	
2007	CLASSIC 1/2 Ton Silverado	2"		3"	9141	8014	8504	9541	10104i	2212FF	9904	5402	5502	AT
	Std. Cab short bed only	2"		3"	9141	8014	8504	9541	10104i	2212FF	9904	5402	5502	AT
	(w/ factory front coil spring)	2"-3"		3"	9145	8000	8504	9545	10103i	2212FF	9904	5402	5502	
		2"-3"		4"	9145	8000	8504	9545	10103i	2212FF	9904	5402	5502	AX
		3"		4"	9145	8000	8504	9545	10103i	2212FF	9904	5402	5502	AT,AX
		4"-5"		6"	9130	8000	8510	9530	10103i	2209FF	9904	5402	5502	AT, AG
		5"		7"	9130	8000	8510	9530	10103i	2209FF	9904	5402	5502	AT, AG
		4"-5"		6" or 7"	9130	8000	8510	9530	10103i	2209FF	9904	5402	5502	AT, AG
01-06	1/2-TON Silverado	0"		2"	9141	8014	8504	9541	10104i	2212FF	9904	5402	5502	
2007	CLASSIC 1/2 Ton Silverado	2"		3"	9141	8014	8504	9541	10104i	2212FF	9904	5402	5502	AT
	Ext. Cab short bed only	2"		3"	9141	8014	8504	9541	10104i	2212FF	9904	5402	5502	AT
	(w/ factory front coil spring)	2"-3"		3"	9145	8000	8504	9545	10103i	2212FF	9904	5402	5502	
		2"-3"		3"	9145	8000	8504	9545	10103i	2212FF	9904	5402	5502	
		2"-3"		4"	9145	8000	8504	9545	10103i	2212FF	9904	5402	5502	AX
		4"-5"		6"	9130	8000	8510	9530	10103i	2209FF	9904	5402	5502	AT,AH
		5"		7"	9130	8000	8510	9530	10103i	2209FF	9904	5402	5502	AT,AH
		4"-5"		6" or 7"	9130	8000	8510	9530	10103i	2209FF	9904	5402	5502	AT,AH
04-06	1/2-TON Silverado / Sierra	0"		2"	9141	8014	8504	9541	10104i	2212FF	9904	5402	5502	
2007	CLASSIC 1/2 Ton Silverado	3"		4"	9145	8000	8504	9545	10103i	2212FF	9904	5402	5502	AU, AX
	Crew Cab (4dr)	3"		4" or 5"	9145	8000	8504	9545	10103i	2212FF	9904	5402	5502	AT,AU,AX
		4"-5"		6"	9130	8000	8510	9530	10103i	2209FF	9904	5402	5502	AT
		4"-5"		6" or 7"	9130	8000	8510	9530	10103i	2209FF	9904	5402	5502	AT
03-07	Silverado SS 1500 (2WD & AWD)	0"		2"	9112	8521	8504	9512	310400	2212FF	9905	5406	5502	
		2"		2"	9112	8521	8504	9512	310400	2212FF	9905	5406	5502	AZ
		2"		2"	9112	8521	8504	9512	310400	2212FF	9905	5406	5502	AT
2001	GMC Sierra C3	0"		2"	9112	8521	8504	9512	310400	2212FF		5406		
02-04	Sierra Denali	2"		2"	9112	8521	8504	9512	310400	2212FF		5406		
	Ext. Cab Only	2"		2"	9112	8521	8504	9512	310400	2212FF		5406		AT
		2"		4"	9112	8521	8504	9512	310400	2212FF		5406		AT
04-06	GMC Sierra Denali			2"	9112	8521	8504	9512	310400	2212FF	9905	5406	5502	
2007	Classic Sierra Denali	2"		2"	9112	8521	8504	9512	310400	2212FF	9905	5406	5502	
	Crew Cab (4dr) only	2"		2"	9112	8521	8504	9512	310400	2212FF	9905	5406	5502	AT
		2"		4"	9112	8521	8504	9512	310400	2212FF	9905	5406	5502	AT

		DESIRED LOWERING			STEP 1 - Lowering Components										
		FRONT		REAR	SET #	FRONT				REAR					
YEAR	MODEL	Without shocks	Leveling Strut Solutions	Without shocks	LOWERING COMPONENTS	SPINDLES BALL JOINT	COIL SPRINGS or KEYS	LEVELING STRUTS	ALIGNMENT KIT	SHACKLE SET	SHACKLE HANGER KITS	COIL SPRINGS	FLIP KIT	BLOCK KIT	LEAF SPRING (/Solid Separately)
1/2-TON FULL SIZE TRUCKS, BLAZERS & JIMMYS (cont.)															
99-00	1/2-TON Silverado	0"		2"	6400					6400					
	Std. Cab short bed only	2"		3"	653	2508					6511				
		2"		3"	QR108	2508									5952
		2"-3"		3"	QR115		23408								5952
		2"-3"		3"	663		23408				6511				
		2"		4"	655	2508					6512				
		2"-3"		4"	664		23408				6512				
		3"		4"	QR110	2508	4302				6512				
		4"-5"		6"	665	2508	23408						6612		
		4"-5"		6" or 7"	669	2508	23408			6700			6612		
99-00	1/2-TON Silverado	0"		2"	6400					6400					
	Ext. Cab short bed only	2"		3"	658	2508					6515				
		2"		3"	QR108	2508									5952
		2"-3"		3"	QR112		23458								5952
		2"-3"		3"	QR113		23458				6515				
		2"		4"	660	2508					6514				
		2"-3"		4"	670		23458				6514				
		3"		4"	QR116		4458				6514				
		4"-5"		6"	680	2508	23458						6614		
		4"-5"		6" or 7"	681	2508	23458			6700			6614		
01-03	1500 HD 2WD/4WD	0"		3"	6403					6403					
	(8 lug rims-6 hole factory hanger)	2"		4"	682	2550					6507				
	5" drop 2WD only	1"-2"		4"	683		3919				6507				
		3"-4"		5"	684	2550	3919				6517				
92-98	1/2-TON C-1500	0"		2"	6400					6400					
	Standard Cab only	2"		4"	685	2500					6500				
	ALL EXCEPT: Ext. Cab & SS 454	2"		4"	QR117	2500									5950
	Coils rated for V8 engine only	3"		4"	QR118	2500	4300								5950
		2"-3"		4"	686		23405				6500				
		3"		4"	687	2500	4300				6500				
		4"-5"		6"	688	2500	23405						6605		
		4"-5"		6" or 7"	689	2500	23405			6700			6605		
88-98	1/2-TON C-1500	0"		2"	6400					6400					
	Ext. Cab only	2"		4"	690	2500					6503				
	Coils rated for V8 engine only	2"		4"	QR117	2500									5950
		3"		4"	QR119	2500	4445								5950
		2"-3"		4"	691		23452				6503				
		3"		4"	692	2500	4445				6503				
		4"-5"		6"	693	2500	23452						6607		
		4"-5"		6" or 7"	694	2500	23452			6700			6607		
88-91	1/2-TON C-1500	0"		2"	6400					6400					
	Standard Cab only	2"		4"	695	2400					6500				
	ALL EXCEPT: Ext. Cab & SS 454	2"		4"	QR120	2400									5950
	Coils rated for V8 engine only	3"		4"	QR121	2400	4300								5950
		2"-3"		4"	666		23405		4950		6500				
		3"		4"	QR122	2400	4300				6500				
		4"-5"		6"	696	2400	23405		4950				6605		
		4"-5"		6" or 7"	697	2400	23405		4950	6700			6605		
90-94	1/2-TON C-1500 SS-454 Only	0"		2"	6400					6400					
		1"-2"		4"	698		23452				6505				
		2"		4"	699	2500					6505				
		2"		4"	QR117	2500									5950
		3"		4"	QR119	2500	4445								5950
		3"		4"	700	2500	4445				6505				
		4"		6"	QR123	2500	4450						6650		
		4"-5"		6"	701	2500	23452						6650		
		4"-5"		6" or 7"	702	2500	23452			6700			6650		
73-87	1/2-TON C-10 Pickup	0"		1"	6700					6700					
	1" Rotor	2"		4"	703		4702				6800				
	(coils rated for small block eng.)	3"		4"	704	3200					6800				
		4"		6"	705	3200	4700						6850		
73-87	1/2-TON C-10 Pickup	0"		1"	6700					6700					
	1-1/4" Rotor	2"		4"	703		4702				6800				
	(coils rated for small block eng.)	3"		4"	706	3100					6800				
		4"		6"	707	3100	4700						6850		
73-87	1/2-TON Blazer / Jimmy,	0"		1"	6700					6700					
	1" Rotor	4"		6"	QR124	3200	4700						6852		
73-87	1/2-TON Blazer / Jimmy,	0"		1"	6700					6700					
	1-1/4" Rotor	4"		6"	QR125	3100	4700						6852		
71-72	1/2-TON C-Pickup	1"		2"	QR126		4700					5352			
	(coils rated for small block eng.)	2"		3"-4"	1118		4702					34354			
		4"		4"	QR127	3120	4700					5354			
		4"		5"	709	3120	4700					5355			
63-70	1/2-TON C-Pickup	1"		2"	QR126		4700					5352			
	(coils rated for small block eng.)	2"		3"-4"	710		4702					34354			
		2"		4"	711		4702					5354			
3/4-TON FULL SIZE TRUCKS															
99-00	2500 HD 2WD/4WD	0"		3"	6403					6403					
& 2004	(8 lug rim-6 hole factory hanger)	2"		4"	682	2550					6507				
	5" drop 2WD only	2"		4"	683		3919				6507				
		3"		5"	684	2550	3919				6517				
2002+	2500 HD 2WD/4WD	0"		3"	6403					6403					
	(8 lug rim-8 hole factory hanger)	2"		4"-5"	712	2550					6508				
	5" drop 2WD only	2"		4"-5"	713		3919				6508				
		3"		5"	714	2550	3919				6518				

Use black highlighted Set # to acquire all lowering components in Step 1

YEAR	MODEL	DESIRED LOWERING FRONT w/o Shocks ND2 & SP	DESIRED LOWERING FRONT Leveling Strut Solutions	DESIRED LOWERING REAR w/o Shocks ND2 & SP	STEP 2 - Shock Absorbers NITRO DROP 2 SHOCK SET	NITRO DROP 2 Single FRONT	NITRO DROP 2 Single REAR	STREET PERFORMANCE SHOCK SET	STREET PERFORMANCE Single FRONT	STREET PERFORMANCE Single REAR	STEP 3 - Swaybars SWAYBAR SET	Single FRONT	Single REAR	Footnotes- (See Foldout)
1/2-TON FULL SIZE TRUCKS, BLAZERS & JIMMYS (cont.)														
99-00	1/2-TON Silverado	0"		2"	9141	8014	8504	9541	10104i	2212FF	9904	5402	5502	
	Std. Cab short bed only	2"		3"	9141	8014	8504	9541	10104i	2212FF	9904	5402	5502	AT
		2"		3"	9141	8014	8504	9541	10104i	2212FF	9904	5402	5502	AT
		2"-3"		3"	9145	8000	8504	9545	10103i	2212FF	9904	5402	5502	
		2"-3"		3"	9145	8000	8504	9545	10103i	2212FF	9904	5402	5502	
		2"		4"	9141	8014	8504	9541	10104i	2212FF	9904	5402	5502	AT,AX
		2"-3"		4"	9145	8000	8504	9545	10103i	2212FF	9904	5402	5502	AX
		3"		4"	9145	8000	8504	9545	10103i	2212FF	9904	5402	5502	AT,AX
		4"-5"		6"	9130	8000	8510	9530	10103i	2209FF	9904	5402	5502	AG,AT
		4"-5"		6" or 7"	9130	8000	8510	9530	10103i	2209FF	9904	5402	5502	AG,AT
99-00	1/2-TON Silverado	0"		2"	9141	8014	8504	9541	10104i	2212FF	9904	5402	5502	
	Ext. Cab short bed only	2"		3"	9141	8014	8504	9541	10104i	2212FF	9904	5402	5502	AT
		2"		3"	9141	8014	8504	9541	10104i	2212FF	9904	5402	5502	AT
		2"-3"		3"	9145	8000	8504	9545	10103i	2212FF	9904	5402	5502	
		2"-3"		3"	9145	8000	8504	9545	10103i	2212FF	9904	5402	5502	
		2"		4"	9141	8014	8504	9541	10104i	2212FF	9904	5402	5502	AT,AX
		2"-3"		4"	9145	8000	8504	9545	10103i	2212FF	9904	5402	5502	AX
		3"		4"	9145	8000	8504	9545	10103i	2212FF	9904	5402	5502	AT,AX
		4"-5"		6"	9130	8000	8510	9530	10103i	2209FF	9904	5402	5502	AT, AH
		4"-5"		6" or 7"	9130	8000	8510	9530	10103i	2209FF	9904	5402	5502	AT,AH
01-03	1500 HD 2WD/4WD	0"		3"										
	(8 lug rims-6 hole factory hanger)	2"		4"										
	5" drop 2WD only	1"-2"		4"										
		3"-4"		5"										
92-98	1/2-TON C-1500	0"		2"	9135	8000	8535	9535	10103i	2214iF	9906	5400	5500	AB
	Standard Cab only	2"		4"	9135	8000	8535	9535	10103i	2214iF	9906	5400	5500	AB
	ALL EXCEPT: Ext. Cab & SS 454	2"		4"	9135	8000	8535	9535	10103i	2214iF	9906	5400	5500	AB
	Coils rated for V8 engine only	3"		4"	9123	8006	8535	9523	10102i	2214iF	9906	5400	5500	AB
		2"-3"		4"	9123	8006	8535	9523	10102i	2214iF	9906	5400	5500	AB
		3"		4"	9123	8006	8535	9523	10102i	2214iF	9906	5400	5500	S,AB
		4"-5"		6"	9122	8006	8502	9522	10102i	2212iF	9906	5400	5500	S,AB
		4"-5"		6" or 7"	9122	8006	8502	9522	10102i	2212iF	9906	5400	5500	S,AB
88-98	1/2-TON C-1500	0"		2"	9135	8000	8535	9535	10103i	2214iF	9906	5400	5500	AB
	Ext. Cab only	2"		4"	9135	8000	8535	9535	10103i	2214iF	9906	5400	5500	S,AB
	Coils rated for V8 engine only	2"		4"	9135	8000	8535	9535	10103i	2214iF	9906	5400	5500	AB
		3"		4"	9123	8006	8535	9523	10102i	2214iF	9906	5400	5500	AB
		2"-3"		4"	9123	8006	8535	9523	10102i	2214iF	9906	5400	5500	C,S,AB
		3"		4"	9123	8006	8535	9523	10102i	2214iF	9906	5400	5500	C,S,AB
		4"-5"		6"	9122	8006	8502	9522	10102i	2212iF	9906	5400	5500	C,S,AB
		4"-5"		6" or 7"	9122	8006	8502	9522	10102i	2212iF	9906	5400	5500	C,S,AB
88-91	1/2-TON C-1500	0"		2"	9135	8000	8535	9535	10103i	2214iF	9906	5400	5500	AB
	Standard Cab only	2"		4"	9135	8000	8535	9535	10103i	2214iF	9906	5400	5500	AB
	ALL EXCEPT: Ext. Cab & SS 454	2"		4"	9135	8000	8535	9535	10103i	2214iF	9906	5400	5500	AB
	Coils rated for V8 engine only	3"		4"	9123	8006	8535	9523	10102i	2214iF	9906	5400	5500	C,AB
		2"-3"		4"	9123	8006	8535	9523	10102i	2214iF	9906	5400	5500	C,AB
		3"		4"	9123	8006	8535	9523	10102i	2214iF	9906	5400	5500	C,AB
		4"-5"		6"	9122	8006	8502	9522	10102i	2212iF	9906	5400	5500	C,S,AB
		4"-5"		6" or 7"	9122	8006	8502	9522	10102i	2212iF	9906	5400	5500	C,S,AB
90-94	1/2-TON C-1500 SS-454 Only	0"		2"	9135	8000	8535	9535	10103i	2214iF	9907	5400	5504	AB
		1"-2"		4"	9123	8006	8535	9523	10102i	2214iF	9907	5400	5504	
		2"		4"	9135	8000	8535	9535	10103i	2214iF	9907	5400	5504	AB
		2"		4"	9135	8000	8535	9535	10103i	2214iF	9907	5400	5504	AB
		3"		4"	9123	8006	8535	9523	10102i	2214iF	9907	5400	5504	C,AB
		3"		4"	9123	8006	8535	9523	10102i	2214iF	9907	5400	5504	C,AB
		4"		6"	9123	8006	8535	9523	10102i	2214iF	9907	5400	5504	C,S,AB
		4"-5"		6"	9122	8006	8502	9522	10102i	2212iF	9907	5400	5504	C,S,AB
		4"-5"		6" or 7"	9122	8006	8502	9522	10102i	2212iF	9907	5400	5504	C,S,AB
73-87	1/2-TON C-10 Pickup	0"		1"	9154	8005	8505	9554	2104HA	2212HF	9908	5404	5508	AA
	1" Rotor	2"		4"	9148	8005	8511	9548	2103HA	2208HF	9908	5404	5508	
	(coils rated for small block eng.)	3"		4"	9148	8005	8511	9552	2104HA	2208HF	9908	5404	5508	AA
		4"		6"	9148	8005	8511	9548	2103HA	2208HF	9908	5404	5508	AA
73-87	1/2-TON C-10 Pickup	0"		1"	9154	8005	8505	9554	2104HA	2212HF	9908	5404	5508	AA
	1-1/4" Rotor	2"		4"	9148	8005	8511	9548	2103HA	2208HF	9908	5404	5508	
	(coils rated for small block eng.)	3"		4"	9148	8005	8511	9552	2104HA	2208HF	9908	5404	5508	AA
		4"		6"	9148	8005	8511	9548	2103HA	2208HF	9908	5404	5508	AA
73-87	1/2-TON Blazer / Jimmy,	0"		1"	9154	8005	8505	9554	2104HA	2212HF	9908	5404	5508	AA
	1" Rotor	4"		6"	9148	8005	8511	9548	2103HA	2208HF	9908	5404	5508	G,P,AA
73-87	1/2-TON Blazer / Jimmy,	0"		1"	9154	8005	8505	9554	2104HA	2212HF	9908	5404	5508	AA
	1-1/4" Rotor	4"		6"	9148	8005	8511	9548	2103HA	2208HF	9908	5404	5508	G,P,AA
71-72	1/2-TON C-Pickup	1"		2"	9147	8005	8508	9547	2103HA	2208AA				
	(coils rated for small block eng.)	2"		3"-4"	9147	8005	8508	9547	2103HA	2208AA				
		4"		4"	9147	8005	8508	9547	2103HA	2208AA				
		4"		5"	9147	8005	8508	9547	2103HA	2208AA				
63-70	1/2-TON C-Pickup	1"		2"	9147	8005	8508	9547	2103HA	2208AA				
	(coils rated for small block eng.)	2"		3"-4"	9147	8005	8508	9547	2103HA	2208AA				
		2"		4"	9147	8005	8508	9547	2103HA	2208AA				
3/4-TON FULL SIZE TRUCKS														
99-00	2500 HD 2WD/4WD	0"		3"							9909	5410	5510	
& 2004	(8 lug rim-6 hole factory hanger)	2"		4"							9909	5410	5510	
	5" drop 2WD only	2"		4"							9909	5410	5510	
		3"		5"							9909	5410	5510	
2002+	2500 HD 2WD/4WD	0"		3"							9909	5410	5510	
	(8 lug rim-8 hole factory hanger)	2"		4"-5"							9909	5410	5510	
	5" drop 2WD only	2"		4"-5"							9909	5410	5510	
		3"		5"							9909	5410	5510	

		DESIRED LOWERING			STEP 1 - Lowering Components										
		FRONT		REAR		FRONT				REAR					
YEAR	MODEL	Without shocks	Leveling Strut Solutions	Without shocks	SET # LOWERING COMPONENTS	SPINDLES BALL JOINT	COIL SPRINGS or KEYS	LEVELING STRUTS	ALIGNMENT KIT	SHACKLE SET	SHACKLE HANGER KITS	COIL SPRINGS	FLIP KIT	BLOCK KIT	LEAF SPRING (/Sold Separately)
3/4-TON FULL SIZE TRUCKS (cont.)															
97-00	3/4 Ton & 1-Ton	0"		2"	6400					6400					
	Single Rear Wheel 8-Lug Only	2"		4"	715		4604				6909				
	& Crew Cab	3"		4"	716	3700					6909				
		5"		8"	QR128	3700	4604						6926		
		4"-5"		8"	717	3700	12604						6926		
97-00	3/4 Ton C-2500 Ext. & Crew Cab	0"		2"	6400					6400					
	Single Rear Wheel 8-Lug Only	2"		4"	718		4604				6907				
	99-00 Old Body Style	3"		4"	719	3700					6907				
		5"		8"	QR128	3700	4604						6926		
		4"-5"		8"	717	3700	12604						6926		
90-96	3/4 Ton C-2500 Ext. Cab	0"		2"	6400					6400					
	Single Rear Wheel 8-Lug Only	2"		4"	720		4600				6905				
		3"		4"	721	3700					6905				
		5"		8"	QR129	3700	4600						6926		
		4"-5"		8"	722	3700	12600						6926		
88-98	3/4-Ton C-2500	0"		2"	6400					6400					
	ALL EXCEPT: 8-LUG	2"		4"	737		4452				6505				
		2"		4"	699	2500					6505				
		3"		4"	QR130	2500	4445				6505				
		4"-5"		6"	QR131	2500	23452						6650		
		4"-5"		6" or 7"	702	2500	23452			6700			6650		
1-TON TRUCKS															
02+	3500 HD Dually Ext. Cab	0"		3"	6403					6403					
	2WD/AWD	2"		3"-4"	723	2550					6509				
	(8 lug rim-10 hole factory hanger)	2"		3"-4"	724		3919				6509				
	5" drop 2WD only	3"		5"	725	2550	3919				6520				
97-00	1-TON SINGLE WHEEL	0"		2"	6400										
	8-LUG.	2"		4"	715		4604				6909				
		3"		4"	716	3700					6909				
		5"		8"	QR128	3700	4604						6926		
		4"-5"		8"	717	3700	12604						6926		
97-00	1-TON C-3500 Std/Ext. Cab &	0"		2"	6400					6400					
	Dually	2"		4"	718		4604				6907				
		3"		4"	719	3700					6907				
		5"		8"	QR128	3700	4604						6926		
		4"-5"		8"	717	3700	12604						6926		
97-00	1-TON C-3500 Crew Cab.	0"		2"	6400					6400					
	and Dually (8' Bed).	2"		4"	715		4604				6909				
		3"		4"	716	3700					6909				
		5"		8"	QR128	3700	4604						6926		
		4"-5"		8"	717	3700	12604						6926		
92-96	1-TON C-3500 Crew Cab.			2"	6400					6400					
		2"		4"	720		4600				6905				
		3"		4"	721	3700					6905				
		5"		8"	QR129	3700	4600						6926		
		4"-5"		8"	722	3700	12600						6926		
90-96	1-TON C-3500 Ext. Cab & Dually	0"		2"	6400					6400					
		3"		4"	721	3700					6905				
1989	1TON C-3500 Ext. Cav & Dually	0"		2"	6400					6400					
		3"		4"	721	3700					6905				
		4"-5"		8"	722	3700	12600						6926		
1988	1-TON C-3500 Ext. Cab & Dually	0"		2"	6400					6400					
		3"		4"	726	3600					6905				
		5"		8"	QR129	3600	4600						6926		
		4"-5"		8"	727	3600	12600						6926		
75-91	1-TON C-30 Crew Cab & Dually	0"		1"	6700					6700					
	Only.	3"		4"	728	3500					6750				
		4"		4"	QR132	3500	4500				6750				
CHEVROLET / GMC Fullsize Truck 4WD Applications															
07+	1/2-TON Silverado / Sierra / Denali	0"		2" or 3"	6401					6401					
	All Cabs	2"		2" or 3"	639	2509				6401					
	Kits with Street Performance	2"		4"	641	2509				6700			6521		
	lowered front struts & rear shocks		+1" to -2"	2" or 3"	QR104			25003	4955	6401					
			+1" to -2"	4"	QR105			25003	4955	6700			6521		
Kits with Street Performance front struts will add 1" lift to 2" lowering range - adjustable in1/2" increments.															
99-06	1/2-TON Silverado	0"		2"	6400					6400					
	Std. Cab & Ext. Cab short bed	2"		2"	678	2508				6400					
88-98	Chevrolet / GMC 1/2 Ton Pickup	0"		2"	6400					6400					
	(Std. and Ext. cab)	1"-3"		2"	729		3920			6400					
		1"-3"		4"	730		3920				6516				
CHEVROLET / GMC SUV 2WD Applications															
TAHOES, YUKONS, SUBURBANS & AVALANCHE															
07+	Tahoe/Yukon/Suburban/Yukon XL	0"		2"	5321							5321			
	w/ factory Autoride Shocks	1"-2" *		3" or 4"	731		12462		4955			34324			
	(* front adj. in 1/2" increments)	2"		3" or 4"	732	2509						34324			
		3"-4" *		3" or 4"	733	2509	12462		4955			34324			
07+	Tahoe/Yukon	1"-2" *		3" or4"	734		12462		4955			23323			
	Without Factory Autoride shocks	2"		3" or 4"	735	2509						23323			
	(* front adj. in 1/2" increments)	3"-4"		3" or 4"	736	2509	12462		4955			23323			
			+1" to -2"	2"	QR133			25003	4955			5321			
			+1" to -2"	3" or 4"	QR134			25003	4955			23323			
			+1" to -4"	3" or 4"	QR135	2509		25003	4955			23323			
07+	Suburban/Yukon XL	1"-2" *		3" or 4"	740		12462		4955			23305			
	Without Factory Autoride Shocks	2"		3" or 4"	741	2509						23305			
	(* front adj. in 1/2" increments)	3"-4" *		3" or 4"	742	2509	12462		4955			23305			
			+1" to -2"	2"	QR136			25003	4955			5301			
			+1" to -2"	3" or 4"	QR137			25003	4955			23305			
			+1" to -4"	3" or 4"	QR138	2509		25003	4955			23305			

Use black highlighted Set # to acquire all lowering components in Step 1

YEAR	MODEL	DESIRED LOWERING FRONT w/o Shocks ND2 & SP	DESIRED LOWERING FRONT Leveling Strut Solutions	DESIRED LOWERING REAR w/o Shocks ND2 & SP	STEP 2 - Shock Absorbers NITRO DROP 2 SHOCK SET	NITRO DROP 2 Single FRONT	NITRO DROP 2 Single REAR	STREET PERFORMANCE SHOCK SET	STREET PERFORMANCE Single FRONT	STREET PERFORMANCE Single REAR	STEP 3 - Swaybars SWAYBAR SET	Single FRONT	Single REAR	Footnotes- (See Foldout)
3/4-TON FULL SIZE TRUCKS (cont.)														
97-00	3/4 Ton & 1-Ton	0"		2"	9135	8000	8535	9535	10103i	2214iF	9907	5400	5504	D,AB
	Single Rear Wheel 8-Lug Only	2"		4"	9123	8006	8535	9523	10102i	2214iF	9907	5400	5504	A,E,AB
	& Crew Cab	3"		4"	9135	8000	8535	9535	10103i	2214iF	9907	5400	5504	E,AB
		5"		8"	9122	8006	8502	9522	10102i	2212iF	9907	5400	5504	A,S,AB
		4"-5"		8"	9122	8006	8502	9522	10102i	2212iF	9907	5400	5504	A,S,AB
97-00	3/4 Ton C-2500 Ext. & Crew Cab	0"		2"	9135	8000	8535	9535	10103i	2214iF	9907	5400	5504	D,AB
	Single Rear Wheel 8-Lug Only	2"		4"	9123	8006	8535	9523	10102i	2214iF	9907	5400	5504	A,E,AB
	99-00 Old Body Style	3"		4"	9135	8000	8535	9535	10103i	2214iF	9907	5400	5504	E,AB
		5"		8"	9122	8006	8502	9522	10102i	2212iF	9907	5400	5504	A,S,AB
		4"-5"		8"	9122	8006	8502	9522	10102i	2212iF	9907	5400	5504	A,S,AB
90-96	3/4 Ton C-2500 Ext. Cab	0"		2"	9135	8000	8535	9535	10103i	2214iF	9907	5400	5504	D,AB
	Single Rear Wheel 8-Lug Only	2"		4"	9123	8006	8535	9523	10102i	2214iF	9907	5400	5504	A,E,AB
		3"		4"	9135	8000	8535	9535	10103i	2214iF	9907	5400	5504	E,AB
		5"		8"	9122	8006	8502	9522	10102i	2212iF	9907	5400	5504	A,S,AB
		4"-5"		8"	9122	8006	8502	9522	10102i	2212iF	9907	5400	5504	A,S,AB
88-98	3/4-Ton C-2500	0"		2"	9135	8000	8535	9535	10103i	2214iF	9906	5400	5500	D,AB
	ALL EXCEPT: 8-LUG	2"		4"	9123	8006	8535	9523	10102i	2214iF	9906	5400	5500	A,U,AB
		2"		4"	9135	8000	8535	9535	10103i	2214iF	9906	5400	5500	A,U,AB
		3"		4"	9123	8006	8535	9523	10102i	2214iF	9906	5400	5500	A,U,AB
		4"-5"		6"	9122	8006	8502	9522	10102i	2212iF	9906	5400	5500	A,C,U,S,AB
		4"-5"		6" or 7"	9122	8006	8502	9522	10102i	2212iF	9906	5400	5500	A,C,U,S,AB
1-TON TRUCKS														
02+	3500 HD Dually Ext. Cab	0"		3"							9909	5410	5510	
	2WD/AWD	2"		3"-4"							9909	5410	5510	
	(8 lug rim-10 hole factory hanger)	2"		3"-4"							9909	5410	5510	
	5" drop 2WD only	3"		5"							9909	5410	5510	
97-00	1-TON SINGLE WHEEL	0"		2"	9135	8000	8535	9535	10103i	2214iF	9907	5400	5504	AB
	8-LUG.	2"		4"	9123	8006	8535	9523	10102i	2214iF	9907	5400	5504	A,E,S,AB
		3"		4"	9135	8000	8535	9535	10103i	2214iF	9907	5400	5504	E,S,AB
		5"		8"	9122	8006	8502	9522	10102i	2212iF	9907	5400	5504	A,S,AB
		4"-5"		8"	9122	8006	8502	9522	10102i	2212iF	9907	5400	5504	A,S,AB
97-00	1-TON C-3500 Std/Ext. Cab &	0"		2"	9135	8000	8535	9535	10103i	2214iF	9907	5400	5504	D,AB
	Dually	2"		4"	9123	8006	8535	9523	10102i	2214iF	9907	5400	5504	A,E,S,AB
		3"		4"	9135	8000	8535	9535	10103i	2214iF	9907	5400	5504	E,S,AB
		5"		8"	9122	8006	8502	9522	10102i	2212iF	9907	5400	5504	A,S,AB
		4"-5"		8"	9122	8006	8502	9522	10102i	2212iF	9907	5400	5504	A,S,AB
97-00	1-TON C-3500 Crew Cab.	0"		2"	9135	8000	8535	9535	10103i	2214iF	9907	5400	5504	D,AB
	and Dually (8' Bed).	2"		4"	9123	8006	8535	9523	10102i	2214iF	9907	5400	5504	A,E,S,AB
		3"		4"	9135	8000	8535	9535	10103i	2214iF	9907	5400	5504	E,S,AB
		5"		8"	9122	8006	8502	9522	10102i	2212iF	9907	5400	5504	A,S,AB
		4"-5"		8"	9122	8006	8502	9522	10102i	2212iF	9907	5400	5504	A,S,AB
92-96	1-TON C-3500 Crew Cab.			2"	9135	8000	8535	9535	10103i	2214iF	9907	5400	5504	D,AB
		2"		4"	9123	8006	8535	9523	10102i	2214iF	9907	5400	5504	A,E,S,AB
		3"		4"	9135	8000	8535	9535	10103i	2214iF	9907	5400	5504	E,S,AB
		5"		8"	9122	8006	8502	9522	10102i	2212iF	9907	5400	5504	A,S,AB
		4"-5"		8"	9122	8006	8502	9522	10102i	2212iF	9907	5400	5504	A,S,AB
90-96	1-TON C-3500 Ext. Cab & Dually	0"		2"	9135	8000	8535	9535	10103i	2214iF	9907	5400	5504	D,AB
		3"		4"	9135	8000	8535	9535	10103i	2214iF	9907	5400	5504	E,S,AB
1989	1TON C-3500 Ext. Cav & Dually	0"		2"	9135	8000	8535	9535	10103i	2214iF	9907	5400	5504	D,AB
		3"		4"	9135	8000	8535	9535	10103i	2214iF	9907	5400	5504	E,S,AB
		4"-5"		8"	9122	8006	8502	9522	10102i	2212iF	9907	5400	5504	A,C,K,S,AB
1988	1-TON C-3500 Ext. Cab & Dually	0"		2"	9135	8000	8535	9535	10103i	2214iF	9907	5400	5504	D,AB
		3"		4"	9135	8000	8535	9535	10103i	2214iF	9907	5400	5504	E,S,AB
		5"		8"	9122	8006	8502	9522	10102i	2212iF	9907	5400	5504	A,C,K,S,AB
		4"-5"		8"	9122	8006	8502	9522	10102i	2212iF	9907	5400	5504	A,C,K,S,AB
75-91	1-TON C-30 Crew Cab & Dually	0"		1"										
	Only.	3"		4"	9149	8005	8506	9553	2104HA	2209iF				
		4"		4"	9149	8005	8506	9549	2103HA	2209iF				A
CHEVROLET / GMC Fullsize Truck 4WD Applications														
07+	1/2-TON Silverado / Sierra / Denali	0"		2" or 3"			8504	9504	25003	2212FF		5407		
	All Cabs	2"		2" or 3"			8504	9504	25003	2212FF		5407		AT, BC
	Kits with Street Performance	2"		4"			8504	9504	25003	2212FF		5407		AT
	lowered front struts & rear shocks		+1" to -2"	2" or 3"				9504	25003	2212FF		5407		BC
			+1" to -2"	4"				9504	25003	2212FF		5407		
	#25003 front strut offers 1" lift to 2" lowering range in 1/2" increments													
99-06	1/2-TON Silverado	0"		2"	9112	8521	8504	9512	310400	2212FF	9908	5406	5502	
	Std. Cab & Ext. Cab short bed	2"		2"	9112	8521	8504	9512	310400	2212FF	9908	5406	5502	AT
88-98	Chevrolet / GMC 1/2 Ton Pickup	0"		2"	9157	8519	8502	9557	2105GD	2214iF				T
	(Std. and Ext. cab)	1"-3"		2"	9157	8519	8502	9557	2105GD	2214iF				T
		1"-3"		4"	9157	8519	8502	9557	2105GD	2214iF				
CHEVROLET / GMC SUV 2WD Applications														
TAHOES, YUKONS, SUBURBANS & AVALANCHE														
07+	Tahoe/Yukon/Suburban/Yukon XL	0"		2"							9909	5407	5506	
	w/ factory Autoride Shocks	1"-2" *		3" or 4"							9909	5407	5506	
	(* front adj. in 1/2" increments)	2"		3" or 4"							9909	5407	5506	AT
		3"-4" *		3" or 4"							9909	5407	5506	AT
07+	Tahoe/Yukon	1"-2" *		3" or4"			8522	9505	25003	2410FF	9909	5407	5506	
	Without Factory Autoride shocks	2"		3" or 4"			8522	9505	25003	2410FF	9909	5407	5506	AT
	(* front adj. in 1/2" increments)	3"-4"		3" or 4"			8522	9505	25003	2410FF	9909	5407	5506	AT
			+1" to -2"	2"			8542	9505	25003	2410FF	9909	5407	5506	
			+1" to -2"	3" or 4"			8522	9505	25003	2410FF	9909	5407	5506	
			+1" to -4"	3" or 4"			8522	9505	25003	2410FF	9909	5407	5506	AT
07+	Suburban/Yukon XL	1"-2" *		3" or 4"			8522	9506	25003	2412FF	9909	5407	5506	
	Without Factory Autoride Shocks	2"		3" or 4"			8522	9506	25003	2412FF	9909	5407	5506	AT
	(* front adj. in 1/2" increments)	3"-4" *		3" or 4"			8522	9506	25003	2412FF	9909	5407	5506	AT
			+1" to -2"	2"			8542	9506	25003	2412FF	9909	5407	5506	
			+1" to -2"	3" or 4"			8522	9505	25003	2410FF	9909	5407	5506	
			+1" to -4"	3" or 4"			8522	9505	25003	2410FF	9909	5407	5506	AT

		DESIRED LOWERING			STEP 1 - Lowering Components										
		FRONT		REAR		FRONT				REAR					
YEAR	MODEL	Without shocks	Leveling Strut Solutions	Without shocks	SET # LOWERING COMPONENTS	SPINDLES BALL JOINT	COIL SPRINGS or KEYS	LEVELING STRUTS	ALIGNMENT KIT	SHACKLE SET	SHACKLE HANGER KITS	COIL SPRINGS	FLIP KIT	BLOCK KIT	LEAF SPRING (/Sold Separately)
TAHOES, YUKONS, SUBURBANS & AVALANCHE (cont.)															
07+	Chevy Avalanche	1"-2" *		3"	746		12462		4955			5301			
	Without Factory Autoride shocks	2"		2" or 3"	747	2509						23301			
	(* front adj. in 1/2" increments)	3"-4" *		4"-5"	748	2509	12462		4955			23305			
			+1" to -2"	2" or 3"	QR139			25003	4955			23301			
			+1" to -4"	4" or 5"	QR138	2509		25003	4955			23305			
Kits with Street Performance front struts will add 1" lift to 2" lowering range - adjustable in1/2" increments.															
TRAIL BLAZER, ENVOY, SSR															
02-06	Trail Blazer/ GMC Envoy 2WD-4WD	2"		3"	795		4207					4230			
			+1" to -2"	3"	QR140			25011				4230			
	BT coilover Kits refer to page 11	1"-2"		3"											
02-06	SS Trail Blazer	1.5"		OEM	4207		4207								
			+1" to -1.5"	OEM	797			25011							
	BT coilover Kits refer to page 11	0"-1.5"		OEM											
02-06	SSR	1.5"		2"	795		4207					4230			
			+1" to -2"	2"	QR140			25011				4230			
	BT coilover Kits refer to page 11	1"-2"		2"		Complete kits include rear springs and shocks									
Kits with Street Performance front struts will add 1" lift to 2" lowering range - adjustable in1/2" increments.															
CHEVROLET / GMC SUV 2WD Applications															
TAHOES, YUKONS, SUBURBANS & AVALANCHE															
00-06	Tahoe / Yukon / Suburban &	0"		2"	5304							5304			
	Yukon XL	0"		2"-3"	23305							23305			
	w/ factory Premium Ride Shocks	1"-2"		2"	754		3921					5304			
		1"-2"		3"	QR142		3921					5305			
		1"-2"		2"-3"	757		3921					23305			
		2"		3"	QR143	2508						5305			
		2"		2"-3"	759	2508						23305			
00-06	Tahoe / Yukon / Suburban / Yukon XL	0"		2"	5301							5301			
	Without Factory Premium Ride	1"-2"		2"	760		3921					5301			
	Shocks	1"-2"		3"	QR141		3921					5304			
		1"-2"		3"-4"	757		3921					23305			
		2"		3"	QR145	2508						5304			
		2"		3"-4"	759	2508						23305			
00-06	Chevy Avalanche Z66	0"		1"-2"	23305							23305			
	w/ factory Premium Ride Shocks	1"-2"		2"	QR142		3921☒					5305			
		1"-2"		1"-2"	757		3921☒					23305			
		2"		2"	QR143	2508						5305			
		2"		1"-2"	759	2508						23305			
00-06	Chevy Avalanche	0"		2"-3"	23301							23301			
	Without Factory Premium Ride Shocks			3"	QR144	2508						5301			
	(Including Z71)			2"-3"	761	2508						23301			
				2"-3"	756		3921☒					23301			
				4"	754		3921					5304			
				4"-5"	757		3921					23305			
				4"	755	2508						5304			
				4"-5"	759	2508						23305			
		3"-4"		5"	QR146	2508	3921					5305			
		3"-4"		4"-5"	781	2508	3921					23305			
95-99	Suburban	2"		4"	782	2500				6700					5962
	1/2-TON 2WD	2"		4"	783		4452			6700					5962
		5"		7"	QR147	2500	4452						6634		
		4"-5"		7"	784	2500	23452						6634		
95-98	Suburban	2"		3"	QR148	2500									5962
	3/4 TON 2WD	2"		3"	785		4450								5962
		3"		4"	786	2500	4445			6700					5962
		4"-5"		7"	QR149	2500	23452						6930		
92-94	Suburban	2"		4"	782	2500				6700					5962
	1/2-TON 2WD	2"		4"	783		4450			6700					5962
		3"		4"	786	2500	4445			6700					5962
		5"		7"	QR150	2500	4452						6620		
		4"-5"		7"	787	2500	23452						6620		
92-94	Suburban	2"		3"	785	2500									5962
	3/4-TON 2WD (6 LUG)	2"		3"	788		4450								5962
		3"		4"	QR151	2500	4445			6700					5962
		4"-5"		7"	789	2500	23452						6624		
95-99	Tahoe / Yukon 4 Door Only	0"		2"	6400					6400					
		2"		2"	790		4450			6400					
		2"-3"		4"	791		23452				6636				
		3"		4"	792	2500	4445				6636				
95-99	Tahoe / Yukon 2 Door Only	2"-3"		3.5"	793		23452								5960
		3"		3.5"	QR152	2500	4445								5960
		4"		5.5"	QR153	2500	4450						6640		
		4"-5"		5.5"	794	2500	23452						6640		
73-91	Suburban 1/2-TON	0"		1"	6700					6700					
	1-1/4" Rotor	4"		6"	QR125	3100	4700						6852		
CADILLAC / CHEVROLET / GMC SUV 4WD Applications															
07+	Escalade	2"		3"-4"	750	2509						34324			
	w/ factory Auto Ride Shocks	1"-2"		3"-4"	751		12463		4955			34324			
			+1" to -2"	3" or 4"	QR154			25003	4955			34324			
			+1" to -4"	3" or 4"	QR155	2509		25003	4955			34324			
07+	Tahoe/Yukon/Suburban/Yukon XL	2"		3"-4"	732	2509						34324			
	& Avalanche	1"-2"		3"-4"	731		12462		4955			34324			
	w/ factory Auto Ride Shocks		+1" to -2"	3" or 4"	QR154			25003	4955			34324			
	(* front adj. in 1/2" increments)		+1" to -4"	3" or 4"	QR155	2509		25003	4955			34324			

Use black highlighted Set # to acquire all lowering components in Step 1

YEAR	MODEL	DESIRED LOWERING FRONT w/o Shocks ND2 & SP	DESIRED LOWERING FRONT Leveling Strut Solutions	DESIRED LOWERING REAR w/o Shocks ND2 & SP	STEP 2 - Shock Absorbers NITRO DROP 2 SHOCK SET	NITRO DROP 2 Single FRONT	NITRO DROP 2 Single REAR	STREET PERFORMANCE SHOCK SET	STREET PERFORMANCE Single FRONT	STREET PERFORMANCE Single REAR	STEP 3 - Swaybars SWAYBAR SET	Single FRONT	Single REAR	Footnotes- (See Foldout)
TAHOES, YUKONS, SUBURBANS & AVALANCHE (cont.)														
07+	Chevy Avalanche	1"-2" *		3"			8542	9505	25003	2410FF	9909	5407	5506	
	Without Factory Autoride shocks	2"		2" or 3"			8542	9505	25003	2410FF	9909	5407	5506	AT
	(* front adj. in 1/2" increments)	3"-4" *		4"-5"			8522	9505	25003	2410FF	9909	5407	5506	AT
			+1" to -2"	2" or 3"			8542	9505	25003	2410FF	9909	5407	5506	
			+1" to -4"	4" or 5"			8522	9505	25003	2410FF	9909	5407	5506	AT
#25003 front strut offers 1" lift to 2" lowering range in 1/2" increments														
TRAIL BLAZER, ENVOY, SSR														
02-06	Trail Blazer/ GMC Envoy 2WD-4WD	2"		3"			8532			2210DD			5530	AZ
			+1" to -2"	3"			8532	9510	25011	2210DD			5530	AZ
	BT coilover Kits refer to page 11	1"-2"		3"									5530	
02-06	SS Trail Blazer	1.5"		OEM									5531	
			+1" to -1.5'	OEM				9510	25011	2210DD			5531	
	BT coilover Kits refer to page 11	0"-1.5"		OEM									5531	
02-06	SSR	1.5"		2"			8532			2212DD				AZ
			+1" to -2"	2"			8532	9510	25011	2210DD			5530	
	BT coilover Kits refer to page 11	1"-2"		2"										
#25011 front strut offers 1" lift to 2" lowering range in 1/2" increments														
CHEVROLET / GMC SUV 2WD Applications														
TAHOES, YUKONS, SUBURBANS & AVALANCHE														
00-06	Tahoe / Yukon / Suburban &	0"		2"							9910	5406	5506	AR
	Yukon XL	0"		2"-3"							9910	5406	5506	AR
	w/ factory Premium Ride Shocks	1"-2"		2"							9910	5406	5506	AR
		1"-2"		3"							9910	5406	5506	AR
		1"-2"		2"-3"							9910	5406	5506	AR
		2"		3"							9910	5406	5506	AT,AR
		2"		2"-3"							9910	5406	5506	AT,AR
00-06	Tahoe / Yukon / Suburban / Yukon XL	0"		2"	9100	8521	8542	9500	310400	2412FF	9910	5406	5506	AQ
	Without Factory Premium Ride	1"-2"		2"	9100	8521	8542	9500	310400	2412FF	9910	5406	5506	AQ
	Shocks	1"-2"		3"	9113	8521	8522	9513	310400	2410FF	9910	5406	5506	AQ
		1"-2"		3"-4"	9113	8521	8522	9513	310400	2410FF	9910	5406	5506	AQ
		2"		3"	9113	8521	8522	9513	310400	2410FF	9910	5406	5506	AT,AQ
		2"		3"-4"	9113	8521	8522	9513	310400	2410FF	9910	5406	5506	AT,AQ
00-06	Chevy Avalanche Z66	0"		1"-2"							9910	5406	5506	AR
	w/ factory Premium Ride Shocks	1"-2"		2"							9910	5406	5506	AR
		1"-2"		1"-2"							9910	5406	5506	AR
		2"		2"							9910	5406	5506	AT,AR
		2"		1"-2"							9910	5406	5506	AT,AR
00-06	Chevy Avalanche	0"		2"-3"	9113	8521	8522	9500	310400	2412FF	9910	5406	5506	AQ
	Without Factory Premium Ride Shocks			3"	9113	8521	8522	9500	310400	2412FF	9910	5406	5506	AT,AQ
	(Including Z71)			2"-3"	9113	8521	8522	9500	310400	2412FF	9910	5406	5506	AT,AQ
				2"-3"	9113	8521	8522	9500	310400	2412FF	9910	5406	5506	AQ
				4"	9113	8521	8522	9513	310400	2410FF	9910	5406	5506	AQ
				4"-5"	9113	8521	8522	9513	310400	2410FF	9910	5406	5506	AQ
				4"	9113	8521	8522	9513	310400	2410FF	9910	5406	5506	AT,AQ
				4"-5"	9113	8521	8522	9513	310400	2410FF	9910	5406	5506	AT,AQ
		3"-4"		5"	9113	8521	8522	9513	310400	2410FF	9910	5406	5506	AT,AQ
		3"-4"		4"-5"	9113	8521	8522	9513	310400	2410FF	9910	5406	5506	AT,AQ
95-99	Suburban	2"		4"	9136	8000	8502	9536	10103i	2412iF	9911	5400	5512	V, AB
	1/2-TON 2WD	2"		4"	9122	8006	8502	9524	10102i	2412iF	9911	5400	5512	V, AB
		5"		7"	9120	8006	8506	9520	10102i	2209iF	9911	5400	5512	S
		4"-5"		7"	9120	8006	8506	9520	10102i	2209iF	9911	5400	5512	S
95-98	Suburban	2"		3"	9136	8000	8502	9536	10103i	2412iF	9911	5400	5512	V, AB
	3/4 TON 2WD	2"		3"	9122	8006	8502	9524	10102i	2412iF	9911	5400	5512	V, AB
		3"		4"	9122	8006	8502	9524	10102i	2412iF	9911	5400	5512	V, AB
		4"-5"		7"	9120	8006	8506	9520	10102i	2209iF	9911	5400	5512	V, AB
92-94	Suburban	2"		4"	9136	8000	8502	9536	10103i	2412iF	9911	5400	5512	V, AB
	1/2-TON 2WD	2"		4"	9122	8006	8502	9524	10102i	2412iF	9911	5400	5512	V, AB
		3"		4"	9122	8006	8502	9524	10102i	2412iF	9911	5400	5512	V, AB
		5"		7"	9120	8006	8506	9520	10102i	2209iF	9911	5400	5512	V, AB
		4"-5"		7"	9120	8006	8506	9520	10102i	2209iF	9911	5400	5512	V, AB
92-94	Suburban	2"		3"	9136	8000	8502	9536	10103i	2412iF	9911	5400	5512	V, AB
	3/4-TON 2WD (6 LUG)	2"		3"	9122	8006	8502	9524	10102i	2412iF	9911	5400	5512	V, AB
		3"		4"	9122	8006	8502	9524	10102i	2412iF	9911	5400	5512	V, AB
		4"-5"		7"	9120	8006	8506	9520	10102i	2209iF	9911	5400	5512	V, AB
95-99	Tahoe / Yukon 4 Door Only	0"		2"	9136	8000	8502	9536	10103i	2412iF	9926	5600	5512	A, V, AB
		2"		2"	9122	8006	8502	9524	10102i	2412iF	9926	5600	5512	A, V, AB
		2"-3"		4"	9122	8006	8502	9524	10102i	2412iF	9926	5600	5512	A, V, AB
		3"		4"	9122	8006	8502	9524	10102i	2412iF	9926	5600	5512	C, V, AB
95-99	Tahoe / Yukon 2 Door Only	2"-3"		3.5"	9122	8006	8502	9524	10102i	2412iF	9912	5600	5650	C, V, AB
		3"		3.5"	9122	8006	8502	9536	10103i	2412iF	9912	5600	5650	C, V, AB
		4"		5.5"	9120	8006	8506	9520	10102i	2209iF	9912	5600	5650	C, V AB, AE
		4"-5"		5.5"	9120	8006	8506	9520	10102i	2209iF	9912	5600	5650	C, V, AB, AE
73-91	Suburban 1/2-TON	0"		1"	9154	8005	8505	9550	2104HA	2212HF	9908	5404	5508	AA
	1-1/4" Rotor	4"		6"	9148	8005	8511	9548	2103HA	2208HF	9908	5404	5508	F, G, P, AA
CADILLAC / CHEVROLET / GMC SUV 4WD Applications														
07+	Escalade	2"		3"-4"				9505	25003	2410FF	9909	5407	5506	AT
	w/ factory Auto Ride Shocks	1"-2"		3"-4"				9505	25003	2410FF	9909	5407	5506	
			+1" to -2"	3" or 4"				9505	25003	2410FF	9909	5407	5506	
			+1" to -4"	3" or 4"				9505	25003	2410FF	9909	5407	5506	AT
07+	Tahoe/Yukon/Suburban/Yukon XL	2"		3"-4"				9505	25003	2410FF	9909	5407	5506	AT
	& Avalanche	1"-2"		3"-4"				9505	25003	2410FF	9909	5407	5506	
	w/ factory Auto Ride Shocks		+1" to -2"	3" or 4"				9505	25003	2410FF	9909	5407	5506	
	(* front adj. in 1/2" increments)		+1" to -4"	3" or 4"				9505	25003	2410FF	9909	5407	5506	AT

		DESIRED LOWERING			STEP 1 - Lowering Components										
		FRONT		REAR		FRONT				REAR					
YEAR	MODEL	Without shocks	Leveling Strut Solutions	Without shocks	SET # / LOWERING COMPONENTS	SPINDLES BALL JOINT	COIL SPRINGS or KEYS	LEVELING STRUTS	ALIGNMENT KIT	SHACKLE SET	SHACKLE HANGER KITS	COIL SPRINGS	FLIP KIT	BLOCK KIT	LEAF SPRING (/Sold Separately)
CADILLAC / CHEVROLET / GMC SUV 4WD Applications (cont.)															
07+	Tahoe/Yukon	2"		3"-4"	735	2509						23323			
	Without Factory Auto Ride Shocks	1"-2"		3"-4"	734		12462		4955			23323			
	(* front adj. in 1/2" increments)		+1" to -2"	2"	QR133			25003	4955			5321			
			+1" to -2"	3" or 4"	QR134			25003	4955			23323			
			+1" to -4"	3" or 4"	QR135	2509		25003	4955			23323			
07+	Suburban/Yukon XL	2"		3"-4"	741	2509						23305			
	Without Factory Auto Ride Shocks	1"-2"		3"-4"	740		12462		4955			23305			
	(* front adj. in 1/2" increments)		+1" to -2"	2"	QR136			25003	4955			5301			
			+1" to -2"	3" or 4"	QR137			25003	4955						
			+1" to -4"	3" or 4"	QR138	2509		25003	4955			23305			
07+	Chevy Avalanche	2"		2"-3"	747	2509						23301			
	Without Factory Auto Ride Shocks	1"-2"		3"	746		12462		4955			5301			
	(* front adj. in 1/2" increments)	3"-4"		4"-5"	748	2509	12462		4955			23305			
			+1" to -2"	2"-3"	QR139			25003	4955			23301			
			+1" to -4"	4"-5"	QR138	2509		25003	4955			23305			
Kits with Street Performance front struts will add 1" lift to 2" lowering range - adjustable in1/2" increments.															
01-06	Escalade / Denali	1"-3"		3"	754		3921					5304			
	Equipped w/ factory Autoride	2"		3"	755	2508						5304			
00-06	Chevy Avalanche Z66	1"-2"		1"-2"	756		3921					23301			
	w/ factory Premium Ride Shocks	1"-2"		2"-3"	757		3921					23305			
		2"		2"-3"	759	2508						23305			
00-06	Chevy Avalanche	1"-2"		3"	760		3921					5301			
	Without Factory Premium Ride Shocks	1"-2"		2"-3"	756		3921					23301			
	(Including Z71)	2"		2"-3"	761	2508						23301			
00-06	Tahoe / Yukon / Suburban / Yukon XL	1"-2"		2"-3"	757		3921					23305			
	w/ factory Premium Ride Shocks	1"-2"		3"	758		3921					5305			
		2"		3"	QR143	2508						5305			
		2"		2"-3"	759	2508						23305			
00-06	Tahoe / Yukon / Suburban / Yukon XL	1"-2"		2"	760		3921					5301			
	Without Factory Premium Ride Shocks	1"-2"		3"	754		3921					5304			
		1"-2"		3"-4"	756		3921					23305			
		2"		3"	755	2508						5304			
		2"		3"-4"	759	2508						23305			
95-99	Tahoe, Yukon, Escalade &	1"-3"		2"	762		3920			6400					
	Denali 4 Door only	1"-3"		3"	763		3920			6700	6637				
		1"-3"		4"	764		3920				6636				
92-99	Suburban	1"-3"		2"	762		3920			6400					
	K-1500 only	1"-3"		4"	765		3920			6400	6635				
92-99	Tahoe, Yukon (2 door only)	1"-3"		1"	766		3920			6700					
		1"-3"		3.5"	767		3920								5960
92-94	Blazer Full Size (4 door only)	1"-3"		3"	763		3920			6700	6637				
		1"-3"		4"	764		3920				6636				
CHEVROLET / GMC Van Applications															
95-02	Astro & Safari Van 2wd	2"		3.5"	768	2700							6302		
	w/ factory steel	2.5"		3.5"	769		4252						6302		
	leaf springs.	2"		3"	QR156	2700									5958
		3"		3.5"	770	2700	4250						6302		
85-95	Astro & Safari Van 2wd	2"		2.5"	771	2700							6300		
	w/ factory composite leaf spring	2.5"		2.5"	772		4252						6300		
CHEVROLET / GMC Car Applications															
92-96	Caprice / Roadmaster Wagon	2"		2.75"	773	2105						5105			
92-96	Caprice / Roadmaster Sedan	2"		2.25"	774	2105						5107			
92-96	Impala SS	2"		1.5"	774	2105						5107			
92-96	Impala SS (complete spring set)	1.5"		1.5"	775		5106					5107			
80-81	Buick: Century	2"		1.5"	776	2100						5100			
80-87	El Camino, Sprint, Regal, GN	2"		1.5"	776	2100						5100			
80-87	Malibu, Monte Carlo S/S	2"		1.5"	776	2100						5100			
80-88	Olds: Cutlass, 442, Salon	2"		1.5"	776	2100						5100			
82-86	Pontiac: Bonneville,	2"		1.5"	776	2100						5100			
80-87	Grand Prix, Le Mans	2"		1.5"	776	2100						5100			
DODGE Truck and SUV Applications															
DODGE DURANGO & DAKOTA															
98-03	Durango	2"		2"	800		4765								5984
97-04	Dakota	2"		4"	801		4764				6574				
	All Cabs (V8 Only)	2"		3"	QR157		4764								5983
97-04	Dakota	2"		4"	802		4766				6574				
	All Cabs (V6 Only)	2"		3"	QR158		4766								5983
97-04	Dakota R/T	1"		2"	803		4764				6575				
91-96	Dakota	2"		4"	804	2605					6570				
	Std. Cab only	2"		4"	805		4761				6570				
	Coils rated for V8 engine only	4"		4"	806	2605	4761				6570				
87-90	Dakota	2"		4"	807	2600					6570				
	Std. Cab only	2"		4"	808		4761				6570				
	Coils rated for V8 engine only	4"		4"	809	2600	4761				6570				
DODGE RAM															
06-07	Dodge Ram 1500 Std. & Quad Cab	0"		1.25"	6405					6405					
		2"		3"	QR159		4759								5988
		2"		5"	810		4759						6686		
02-05	Dodge Ram 1500 Std. Cab	0"		1.25"	6405					6405					
		2"		3"	QR160		4756		4949						5987
		2"		5"	811		4756		4949				6686		
02-05	Dodge Ram 1500 Quad Cab	0"		1.25"	6405					6405					
		2"		3"	QR161		4758		4949						5988
		2"		5"	812		4758		4949				6686		

Use black highlighted Set # to acquire all lowering components in Step 1

YEAR	MODEL	DESIRED LOWERING FRONT w/o Shocks ND2 & SP	DESIRED LOWERING FRONT Leveling Strut Solutions	DESIRED LOWERING REAR w/o Shocks ND2 & SP	STEP 2 - Shock Absorbers NITRO DROP 2 SHOCK SET	NITRO DROP 2 Single FRONT	NITRO DROP 2 Single REAR	STREET PERFORMANCE SHOCK SET	STREET PERFORMANCE Single FRONT	STREET PERFORMANCE Single REAR	STEP 3 - Swaybars SWAYBAR SET	Single FRONT	Single REAR	Footnotes- (See Foldout)
CADILLAC / CHEVROLET / GMC SUV 4WD Applications (cont.)														
07+	Tahoe/Yukon	2"		3"-4"			8522	9505	25003	2410FF	9909	5407	5506	AT
	Without Factory Auto Ride Shocks	1"-2"		3"-4"			8522	9505	25003	2410FF	9909	5407	5506	
	(* front adj. in 1/2" increments)		+1" to -2"	2"			8542	9506	25003	2412FF	9909	5407	5506	
			+1" to -2"	3" or 4"			8522	9505	25003	2410FF	9909	5407	5506	
			+1" to -4"	3" or 4"			8522	9505	25003	2410FF	9909	5407	5506	AT
07+	Suburban/Yukon XL	2"		3"-4"			8522	9505	25003	2410FF	9909	5407	5506	AT
	Without Factory Auto Ride Shocks	1"-2"		3"-4"			8522	9505	25003	2410FF	9909	5407	5506	
	(* front adj. in 1/2" increments)		+1" to -2"	2"			8542	9506	25003	2412FF	9909	5407	5506	
			+1" to -2"	3" or 4"			8522	9505	25003	2410FF	9909	5407	5506	
			+1" to -4"	3" or 4"			8522	9505	25003	2410FF	9909	5407	5506	AT
07+	Chevy Avalanche	2"		2"-3"			8522	9506	25003	2412FF	9909	5407	5506	AT
	Without Factory Auto Ride Shocks	1"-2"		3"			8522	9506	25003	2412FF	9909	5407	5506	
	(* front adj. in 1/2" increments)	3"-4"		4"-5"			8522	9505	25003	2410FF	9909	5407	5506	AT
			+1" to -2"	2"-3"			8522	9506	25003	2412FF	9909	5407	5506	
			+1" to -4"	4"-5"			8522	9505	25003	2410FF	9909	5407	5506	AT
#25003 front strut offers 1" lift to 2" lowering range in 1/2" increments														
01-06	Escalade / Denali	1"-3"		3"	Use Stock Auto Ride Shocks			Use Stock Auto Ride Shocks			9910	5406	5506	T
	Equipped w/ factory Autoride	2"		3"							9910	5406	5506	AT
00-06	Chevy Avalanche Z66	1"-2"		1"-2"	Use Stock Premium Ride Shocks			Use Stock Premium Ride Shocks			9910	5406	5506	
	w/ factory Premium Ride Shocks	1"-2"		2"-3"							9910	5406	5506	
		2"		2"-3"							9910	5406	5506	AT
00-06	Chevy Avalanche	1"-2"		3"	9113	8521	8522	9513	310400	2410FF	9910	5406	5506	
	Without Factory Premium Ride Shocks	1"-2"		2"-3"	9113	8521	8522	9500	310400	2412FF	9910	5406	5506	
	(Including Z71)	2"		2"-3"	9113	8521	8522	9500	310400	2412FF	9910	5406	5506	AT
00-06	Tahoe / Yukon / Suburban / Yukon XL	1"-2"		2"-3"	Use Stock Premium Ride Shocks			Use Stock Premium Ride Shocks			9910	5406	5506	
	w/ factory Premium Ride Shocks	1"-2"		3"							9910	5406	5506	
		2"		3"							9910	5406	5506	AT
		2"		2"-3"							9910	5406	5506	AT
00-06	Tahoe / Yukon / Suburban / Yukon XL	1"-2"		2"	9100	8521	8542	9500	310400	2412FF	9910	5406	5506	
	Without Factory Premium Ride Shocks	1"-2"		3"	9113	8521	8522	9513	310400	2410FF	9910	5406	5506	
		1"-2"		3"-4"	9113	8521	8522	9513	310400	2410FF	9910	5406	5506	
		2"		3"	9113	8521	8522	9513	310400	2410FF	9910	5406	5506	AT
		2"		3"-4"	9113	8521	8522	9513	310400	2410FF	9910	5406	5506	AT
95-99	Tahoe, Yukon, Escalade &	1"-3"		2"	9157	8519	8502	9558	2105GD	2412iF	9911	5600	5512	T,V
	Denali 4 Door only	1"-3"		3"	9157	8519	8502	9558	2105GD	2412iF	9911	5600	5512	T,V
		1"-3"		4"	9157	8519	8502	9558	2105GD	2412iF	9911	5600	5512	T,V
92-99	Suburban	1"-3"		2"	9157	8519	8502	9558	2105GD	2412iF				T
	K-1500 only	1"-3"		4"	9157	8519	8502	9558	2105GD	2412iF				T
92-99	Tahoe, Yukon (2 door only)	1"-3"		1"	9157	8519	8502	9558	2105GD	2412iF				T
		1"-3"		3.5"	9157	8519	8502	9558	2105GD	2412iF				T
92-94	Blazer Full Size (4 door only)	1"-3"		3"	9157	8519	8502	9558	2105GD	2412iF				T
		1"-3"		4"	9157	8519	8502	9558	2105GD	2412iF				T
CHEVROLET / GMC Van Applications														
95-02	Astro & Safari Van 2wd	2"		3.5"	9121	8000	8532	9521	10103i	2210DD	9913	5428	5528	L,X,AF
	w/ factory steel	2.5"		3.5"	9121	8000	8532	9521	10103i	2210DD	9913	5428	5528	X,AF
	leaf springs.	2"		3"	9121	8000	8532	9521	10103i	2210DD	9913	5428	5528	L
		3"		3.5"	9121	8000	8532	9521	10103i	2210DD	9913	5428	5528	L,X,AF
85-95	Astro & Safari Van 2wd	2"		2.5"	9121	8000	8532	9521	10103i	2210DD	9913	5428	5528	L,AF
	w/ factory composite leaf spring	2.5"		2.5"	9121	8000	8532	9521	10103i	2210DD	9913	5428	5528	AF
CHEVROLET / GMC Car Applications														
92-96	Caprice / Roadmaster Wagon	2"		2.75"	9132	8000	8512	9532	10103i	2209iH				
92-96	Caprice / Roadmaster Sedan	2"		2.25"	9132	8000	8512	9532	10103i	2209iH				
92-96	Impala SS	2"		1.5"	9132	8000	8512	9532	10103i	2209iH				B
92-96	Impala SS (complete spring set)	1.5"		1.5"	9132	8000	8512	9532	10103i	2209iH				
80-81	Buick: Century	2"		1.5"	9118	8006	8512	9518	10101i	2209iH				
80-87	El Camino, Sprint, Regal, GN	2"		1.5"	9118	8006	8512	9518	10101i	2209iH	9914	5432	5532	
80-87	Malibu, Monte Carlo S/S	2"		1.5"	9118	8006	8512	9518	10101i	2209iH				
80-88	Olds: Cutlass, 442, Salon	2"		1.5"	9118	8006	8512	9518	10101i	2209iH				
82-86	Pontiac: Bonneville,	2"		1.5"	9118	8006	8512	9518	10101i	2209iH				
80-87	Grand Prix, Le Mans	2"		1.5"	9118	8006	8512	9518	10101i	2209iH				
DODGE Truck and SUV Applications														
DODGE DURANGO & DAKOTA														
98-03	Durango	2"		2"	9115	8009	8524	9515	10101i	2212DD				
97-04	Dakota	2"		4"	9115	8009	8524	9515	10101i	2212DD	9915	5438	5538	
	All Cabs (V8 Only)	2"		3"	9115	8009	8524	9515	10101i	2212DD	9915	5438	5538	
97-04	Dakota	2"		4"	9115	8009	8524	9515	10101i	2212DD	9915	5438	5538	
	All Cabs (V6 Only)	2"		3"	9115	8009	8524	9515	10101i	2212DD	9915	5438	5538	
97-04	Dakota R/T	1"		2"	9115	8009	8524	9515	10101i	2212DD	9915	5438	5538	AP
91-96	Dakota	2"		4"	9119	8006	8533	9519	10102i	2210iD	9916	5436	5536	AC
	Std. Cab only	2"		4"	9114	8009	8533	9514	10101i	2210iD	9916	5436	5536	AC
	Coils rated for V8 engine only	4"		4"	9114	8009	8533	9514	10101i	2210iD	9916	5436	5536	AC
87-90	Dakota	2"		4"	9119	8006	8533	9519	10102i	2210iD	9916	5436	5536	AC
	Std. Cab only	2"		4"	9114	8009	8533	9514	10101i	2210iD	9916	5436	5536	AC
	Coils rated for V8 engine only	4"		4"	9114	8009	8533	9514	10101i	2210iD	9916	5436	5536	AC
DODGE RAM														
06-07	Dodge Ram 1500 Std. & Quad Cab	0"		1.25"	9146	8001	8536	9546	10603i	2215FF			5555	
		2"		3"	9143	8006	8504	9543	10602i	2212FF			5555	
		2"		5"	9143	8006	8504	9543	10602i	2212FF			5555	
02-05	Dodge Ram 1500 Std. Cab	0"		1.25"	9146	8001	8536	9546	10603i	2215FF			5555	
		2"		3"	9143	8006	8504	9543	10602i	2212FF			5555	
		2"		5"	9143	8006	8504	9543	10602i	2212FF			5555	
02-05	Dodge Ram 1500 Quad Cab	0"		1.25"	9146	8001	8536	9546	10603i	2215FF			5555	
		2"		3"	9143	8006	8504	9543	10602i	2212FF			5555	
		2"		5"	9143	8006	8504	9543	10602i	2212FF			5555	

		DESIRED LOWERING			STEP 1 - Lowering Components										
		FRONT		REAR		FRONT					REAR				
YEAR	MODEL	Without shocks	Leveling Strut Solutions	Without shocks	SET # LOWERING COMPONENTS	SPINDLES BALL JOINT	COIL SPRINGS or KEYS	LEVELING STRUTS	ALIGNMENT KIT	SHACKLE SET	SHACKLE HANGER KITS	COIL SPRINGS	FLIP KIT	BLOCK KIT	LEAF SPRING (/Sold Separately)
DODGE DURANGO & DAKOTA (cont.)															
94-99	Dodge Ram 1500 Std. Cab	0"		2"	6400					6400					
	Auto Trans Only	2"		4"	813	2650					6580				
	ALL EXCEPT: Long Beds	2"		4"	QR162	2650									5985
	Coils rated for V8 engine only	2"-3"		4"	814		23754				6580				
		3"		4"	QR163	2650	4750								5985
		3"		4"	815	2650	4750				6580				
		4"-5"		6"	816	2650	23754						6680		
		5"		6" or 7"	QR164	2650	4754			6700			6680		
		4"-5"		6" or 7"	817	2650	23754			6700			6680		
94-99	Dodge Ram 1500 Ext. Cab	0"		2"	6400					6400					
	Auto Trans Only	2"		4"	818	2650					6584				
	ALL EXCEPT: Long Beds	2"		4"	QR162	2650									5985
	Coils Rated for V8 engine only	2"-3"		4"	819		23754				6584				
		3"		4"	QR163	2650	4750								5985
		3"		4"	820	2650	4750				6584				
		4"-5"		6"	821	2650	23754						6681		
		5"		6" or 7"	QR165	2650	4754			6700			6681		
		4"-5"		6" or 7"	822	2650	23754			6700			6681		
DODGE RAM 3/4 & 1 TON TRUCK															
94-00	Dodge Ram 2500	0"		2"	6590					6590					
	V-10 & Diesel	3"		4"	823		4776				6594				
94-00	Dodge Ram 3500	0"		2"	6590					6590					
	V-10 & Diesel	3"		4"	824		4776				6592				
FORD Truck and SUV 2WD Applications															
RANGER															
98-03	Ford Ranger Std. & Ext. Cab	3"		3"	900		4797		4954						5980
89-97	Ford Ranger	2"		2"	901		4794				6408				
	Std. Cab	2"		4"	902		4794				6410				
		3"		4"	903	4005					6410				
		3"		4"	QR166	4005									5970
		5"		5.5"	QR167	4005	4794						6435		
89-97	Ford Ranger	2"		2"	901		4794				6408				
	Ext. Cab	2"		4"	904		4794				6412				
		3"		4"	905	4005					6412				
		3"		4"	QR166	4005									5970
		5"		5.5"	QR168	4005	4794						6437		
1/2-TON TRUCKS F-150															
04+	Ford F-150 2WD	0"		1"	6425					6425					
	All Cabs	0"		2"	6406					6406					
		2"		2"	906	2351				6406					
		2"-3"		3"	QR170		23807								5982
		3"		5"	907		4807						6440		
		2"-3"		5"	908		23807						6440		
		2"		5"	909	2351							6440		
		2"-4"		5"	910	2351		25001					6440		
			1" to -4"	5"	QR171	2351		25001					6440		
			+1" to -3"	2"	QR172			25001		6406					
			+1" to -3"	3"	QR173			25001							5982
			+1" to -3"	5"	QR174			25001					6440		
	BT coilover Kits refer to page 11	0"-3"													
	Kits with Street Performance front struts will add a 1" lift to 3" lowering range - adjustable in1/2" increments.														
97-03	Ford F150, F250 Light Duty	0"		2"	6400					6400					
	Std. Cab, Ext Cab	2"		3"	QR175	2350									5986
	Coils rated for V8 engine only	2"		4"	915	2350					6419				
		3"		4"	916		4804		4952		6419				
		2"-3"		4"	917		23804				6419				
		4"		6"	QR176	2350	4803						6690		
		4"-5"		6"	918	2350	23804		4952				6690		
97-03	Ford F150	0"		2"	6400					6400					
	Super Crew Cab	2"		4"	QR175	2350									5986
	Coils rated for V8 engine only	2"		4"	915	2350					6419				
		3"		4"	916		4804		4952		6419				
		2"-3"		4"	917		23804				6419				
		4"		6"	QR177	2350	4803						6691		
		4"-5"		6"	919	2350	23804		4952				6691		
97-03	Ford Lightning	1"		2"	920		4804		4952	6400					
		2"		3"	921	2350				6700	6418				
97-03	Ford Harley Series	2"		2"	922	2350				6400					
		2"		3"	921	2350				6700	6418				
		2"		3"	923		4804		4952	6700	6418				
87-96	Ford F-150			1"	6700					6700					
	Std. Cab	2"		4"	924		4800				6415				
87-96	Ford F-150			1"	6700					6700					
	Ext. Cab	2"		4"	926		4800				6417				
3/4 TON F-250 & 1 TON F-350 TRUCKS															
87-98	F-250/350 Std./Crew Cab Dually			2"	6425					6425					
	All Except: Diesel engine	2"		4"	942		4805				6420				
97-98	F-250/350 Ext. Cab Dually Only			2"	6425					6425					
	All Except: Diesel engine	2"		4"	943		4805				6422				
FORD SUV															
02-05	Ford Explorer	2"		2.5"	928		4810					5310			
03-05	Ford Expedition, Navigator (2WD)	2"		2"	929		4807					5309			

Use black highlighted Set # to acquire all lowering components in Step 1

YEAR	MODEL	DESIRED LOWERING FRONT w/o Shocks ND2 & SP	DESIRED LOWERING FRONT Leveling Strut Solutions	DESIRED LOWERING REAR w/o Shocks ND2 & SP	STEP 2 - Shock Absorbers NITRO DROP 2 SHOCK SET	NITRO DROP 2 Single FRONT	NITRO DROP 2 Single REAR	STREET PERFORMANCE SHOCK SET	STREET PERFORMANCE Single FRONT	STREET PERFORMANCE Single REAR	STEP 3 - Swaybars SWAYBAR SET	Single FRONT	Single REAR	Footnotes- (See Foldout)
DODGE DURANGO & DAKOTA (cont.)														
94-99	Dodge Ram 1500 Std. Cab	0"		2"	9163	8004	8504	9563	10603F	2212FF				R
	Auto Trans Only	2"		4"	9163	8004	8504	9563	10603F	2212FF				R
	ALL EXCEPT: Long Beds	2"		4"	9163	8004	8504	9563	10603F	2212FF				R
	Coils rated for V8 engine only	2"-3"		4"	9160	8010	8504	9560	10602F	2212FF				R
		3"		4"	9160	8010	8504	9560	10602F	2212FF				R
		3"		4"	9160	8010	8504	9560	10602F	2212FF				R
		4"-5"		6"	9161	8010	8510	9561	10602F	2209FF				R
		5"		6" or 7"	9161	8010	8510	9561	10602F	2209FF				R
		4"-5"		6" or 7"	9161	8010	8510	9561	10602F	2209FF				R
94-99	Dodge Ram 1500 Ext. Cab	0"		2"	9163	8004	8504	9563	10603F	2212FF				R
	Auto Trans Only	2"		4"	9163	8004	8504	9563	10603F	2212FF				R
	ALL EXCEPT: Long Beds	2"		4"	9163	8004	8504	9563	10603F	2212FF				R
	Coils Rated for V8 engine only	2"-3"		4"	9160	8010	8504	9560	10602F	2212FF				R
		3"		4"	9160	8010	8504	9560	10602F	2212FF				R
		3"		4"	9160	8010	8504	9560	10602F	2212FF				R
		4"-5"		6"	9161	8010	8510	9561	10602F	2209FF				R
		5"		6" or 7"	9161	8010	8510	9561	10602F	2209FF				R
		4"-5"		6" or 7"	9161	8010	8510	9561	10602F	2209FF				R
DODGE RAM 3/4 & 1 TON TRUCK														
94-00	Dodge Ram 2500	0"		2"	9163	8004	8504	9563	10603F	2212FF				
	V-10 & Diesel	3"		4"	9160	8010	8504	9560	10602F	2212FF				
94-00	Dodge Ram 3500	0"		2"	9163	8004	8504	9563	10603F	2212FF				
	V-10 & Diesel	3"		4"	9160	8010	8504	9560	10602F	2212FF				
FORD Truck and SUV 2WD Applications														
RANGER														
98-03	Ford Ranger Std. & Ext. Cab	3"		3"	9133	8000	8514	9533	10103i	2210HE	9917	5444	5552	AL
89-97	Ford Ranger	2"		2"	9127	8013	8514	9527	10103H	2210HE	90-97 models use:			
	Std. Cab	2"		4"	9127	8013	8514	9527	10103H	2210HE	9927	5445	5552	
		3"		4"	9127	8013	8514	9527	10103H	2210HE	1989 models only			J
		3"		4"	9127	8013	8514	9527	10103H	2210HE	9918	5442	5552	J
		5"		5.5"	9127	8013	8514	9527	10103H	2210HE				J
89-97	Ford Ranger	2"		2"	9127	8013	8514	9527	10103H	2210HE	90-97 models use:			
	Ext. Cab	2"		4"	9127	8013	8514	9527	10103H	2210HE	9927	5445	5552	
		3"		4"	9127	8013	8514	9527	10103H	2210HE	1989 models only			J
		3"		4"	9127	8013	8514	9527	10103H	2210HE	9918	5442	5552	J
		5"		5.5"	9127	8013	8514	9527	10103H	2210HE				J
1/2-TON TRUCKS F-150														
04+	Ford F-150 2WD	0"		1"			8537	9542	25001	2214EE			5548	
	All Cabs	0"		2"			8523	9502	25001	2213EE			5548	
		2"		2"			8523	9502	25001	2213EE			5548	BB
		2"-3"		3"			8523	9502	25001	2213EE			5548	
		3"		5"			8523	9501	25001	2211EE			5548	AZ
		2"-3"		5"			8523	9501	25001	2211EE			5548	AZ
		2"		5"			8523	9501	25001	2211EE			5548	BB
		2"-4"		5"			8523	9501	25001	2211EE			5548	BB
			1" to -4"	5"			8523	9501	25001	2211EE			5548	BB
			+1" to -3"	2"			8523	9502	25001	2213EE			5548	
			+1" to -3"	3"			8523	9502	25001	2213EE			5548	
			+1" to -3"	5"			8523	9501	25001	2211EE			5548	
	BT coilover Kits refer to page 11	0"-3"												
	#25001 front strut offers a 1" lift to 3" lowering range in 1/2" increments													
97-03	Ford F150, F250 Light Duty	0"		2"	9140	8014	8518	9540	10104i	10311B	9919	5446	5546	
	Std. Cab, Ext Cab	2"		3"	9140	8014	8518	9540	10104i	10311B	9919	5446	5546	AV
	Coils rated for V8 engine only	2"		4"	9140	8014	8518	9540	10104i	10311B	9919	5446	5546	AV
		3"		4"	9129	8000	8518	9529	10103i	10311B	9919	5446	5546	AJ
		2"-3"		4"	9129	8000	8518	9529	10103i	10311B	9919	5446	5546	AJ
		4"		6"	9129	8000	8518	9528	10103i	10309B	9919	5446	5546	AV
		4"-5"		6"	9129	8000	8518	9528	10103i	10309B	9919	5446	5546	AV
97-03	Ford F150	0"		2"	9140	8014	8518	9540	10104i	10311B	9920	5446	5547	
	Super Crew Cab	2"		4"	9140	8014	8518	9540	10104i	10311B	9920	5446	5547	AV
	Coils rated for V8 engine only	2"		4"	9140	8014	8518	9540	10104i	10311B	9920	5446	5547	AV
		3"		4"	9129	8000	8518	9529	10103i	10311B	9920	5446	5547	AJ
		2"-3"		4"	9129	8000	8518	9529	10103i	10311B	9920	5446	5547	AJ
		4"		6"	9129	8000	8518	9528	10103i	10309B	9920	5446	5547	AV
		4"-5"		6"	9129	8000	8518	9528	10103i	10309B	9920	5446	5547	AV
97-03	Ford Lightning	1"		2"	9129	8000	8518	9529	10103i	10311B	9920	5446	5547	AM,AP,AJ
		2"		3"	9129	8000	8518	9529	10103i	10311B	9920	5446	5547	AV,AM,AP
97-03	Ford Harley Series	2"		2"	9129	8000	8518	9529	10103i	10311B	9920	5446	5547	AV,AM,AP
		2"		3"	9129	8000	8518	9529	10103i	10311B	9920	5446	5547	AV,AM,AP
		2"		3"	9129	8000	8518	9529	10103i	10311B	9920	5446	5547	AM,AP,AJ
87-96	Ford F-150			1"	9128	8023	8503	9538	10104B	2211HB				
	Std. Cab	2"		4"	9126	8002	8503	9526	10103B	2211HB				
87-96	Ford F-150			1"	9128	8023	8503	9538	10104B	2211HB				
	Ext. Cab	2"		4"	9126	8002	8503	9526	10103B	2211HB				
3/4 TON F-250 & 1 TON F-350 TRUCKS														
87-98	F-250/350 Std./Crew Cab Dually			2"			8503			2211HB				
	All Except: Diesel engine	2"		4"	9126	8002	8503	9526	10103B	2211HB				
97-98	F-250/350 Ext. Cab Dually Only			2"			8503			2211HB				
	All Except: Diesel engine	2"		4"	9126	8002	8503	9526	10103B	2211HB				
FORD SUV														
02-05	Ford Explorer	2"		2.5"							9927	5443	5543	
03-05	Ford Expedition, Navigator (2WD)	2"		2"									5555	

		DESIRED LOWERING			STEP 1 - Lowering Components										
		FRONT		REAR	FRONT					REAR					
YEAR	MODEL	Without shocks	Leveling Strut Solutions	Without shocks	SET # / LOWERING COMPONENTS	SPINDLES BALL JOINT	COIL SPRINGS or KEYS	LEVELING STRUTS	ALIGNMENT KIT	SHACKLE SET	SHACKLE HANGER KITS	COIL SPRINGS	FLIP KIT	BLOCK KIT	LEAF SPRING (/Sold Separately)
FORD SUV (cont.)															
97-02	Ford Expedition, Navigator (2WD) w/ factory equip. rear coil spring	2"		2"	930		4803					5307			
		2"		2"	931	2350						5307			
		2"		3"	932	2350						5308			
		3"		3"	934		4804		4952			5308			
97-02	Ford Expedition, Navigator (2WD) w/ factory equip. rear air spring	2"		2" to 3"	939		4803					5011			
		2"		2" to 3"	940	2350						5011			
		3"		2" to 3"	941		4804		4952			5011			
FORD Truck and SUV 4WD Applications															
04+	Ford F-150 4WD All Cabs	0"		1" or 3"	6425					6425					
		0"		2" or 4"	6406					6409					
		2"		2" or 4"	933		4806			6409					
		3"		3" or 5"	QR180		4807								5982
		2"-3"		3" or 5"	QR170		23807								5982
			+2" to -2"	0" or 2"	QR181			25002							
			+2" to -2"	2" or 4"	QR182			25002		6409					
			+1" to -3"	3" or 5"	QR173			25001							5982
	BT coilover Kits refer to page 11	0"-3"													
Kits with Street Performance front struts will add a 2" lift to 2" lowering range - adjustable in1/2" increments.															
97-03	Ford F 150 All Cabs	1-3"		2"	936		3933		4952	6400					
		1-3"		3"	937		3933		4952	6700	6418				
		1-3"		4"	938		3933		4952		6419				
IMPORT Truck and SUV Applications															
BMW															
04+	BMW X3 BT coilover Kits refer to page 11	1.4"-2.7"		1.2"-2.7"		Complete kits include rear springs and shocks									
00+	BMW X5 BT coilover Kits refer to page 11	1.4"-2.7"		1.4"-2.7"		Complete kits include rear springs and shocks									
Honda															
05+	Honda Ridgeline BT coilover Kits refer to page 11	1.4"-2.6"		1.4"-2.6"		Complete kits include rear springs and shocks									
96-03	Isuzu Hombre (6 Cyl.)	2"		2"	612	2100								6100	
		2"		2"	777		4223							6100	
		2"-3"		3"	650		23227							6200	
		2"		3"	614	2100								6200	
		3"		3"	778	2100	4202							6200	
		4"-5"		5"	620	2100	23227							6100	5954
96-03	Isuzu Hombre (4 Cyl.)	2"		2"	612	2100								6100	
		2"		2"	779		4200							6100	
		2"-3"		3"	615		23225							6200	
		2"		3"	614	2100								6200	
		3"		3"	780	2100	4200							6200	
		4"-5"		5"	619	2100	23225							6100	5954
Mazda															
98-04	Mazda B-2300/3000/4000 All Cabs	3"		3"	900		4797		4954						5980
94-97	Mazda B-2300/3000/4000 Std. Cab	3"		4"	903	4005					6410				
		3"		4"	QR166	4005									5970
		5"		5.5"	QR167	4005	4794						6435		
94-97	Mazda B-2300/3000/4000 Ext. Cab	3"		4"	905	4005					6412				
		3"		4"	QR166	4005									5970
		5"		5.5"	QR168	4005	4794						6437		
Mitsubishi															
03+	Mitsubishi Outlander BT coilover Kits refer to page 11	0.9"-2.5"		0"-1.8"		Complete kits include rear springs and shocks									
83-97	Mitsubishi Pickup Series	2.5"		3"	436		4270							6200	
Nissan															
04-07	Nissan Titan	2"		4"	437		4809						6450		5981
			+2" to -2"	4"	QR183			25009					6450		5981
Kits with Street Performance front struts offer 2" lift to 2" lowering range - adjustable in1/2" increments.															
98-00	Nissan Frontier (all except crew cab)	2"		3"	439	2010								6200	
83-97	Nissan Pickup & Hardbody	2"		3"	440	2005								6200	
		2"		3"	QR185	2005									5976
Porsche															
2002+	Porsche Cayenne, Cayenne S BT coilover Kits refer to page 11	1.4"-2.7"		1.4"-2.7"		Complete kits include rear springs and shocks									
Toyota															
2007+	Toyota Tundra All cabs-V8 only	2"		4"	441		4263						6540		
			+2" to -2"	4"	QR184			25010					6540		
Kits with Street Performance front struts offer 2" lift to 2" lowering range - adjustable in1/2" increments															
96-02	Toyota Tacoma (6 Cyl.)	2"		3"	443		4260							6200	
84-95	Toyota Pickup	2"		3"	444	2000								6200	
		2"		3"	QR185	2000									5978
Volkswagen															
2002+	Volkswagen Touareg BT coilover Kits refer to page 11	1.4"-2.7"		1.4"-2.5"		Complete kits include rear springs and shocks									

Use black highlighted Set # to acquire all lowering components in Step 1

YEAR	MODEL	DESIRED LOWERING FRONT w/o Shocks ND2 & SP	DESIRED LOWERING FRONT Leveling Strut Solutions	DESIRED LOWERING REAR w/o Shocks ND2 & SP	STEP 2 - Shock Absorbers NITRO DROP 2 SHOCK SET	NITRO DROP 2 Single FRONT	NITRO DROP 2 Single REAR	STREET PERFORMANCE SHOCK SET	STREET PERFORMANCE Single FRONT	STREET PERFORMANCE Single REAR	STEP 3 - Swaybars SWAYBAR SET	Single FRONT	Single REAR	Footnotes- (See Foldout)
FORD SUV (cont.)														
97-02	Ford Expedition, Navigator (2WD)	2"		2"	9139	8000	8509	9539	10103i	2208HB	9921	5449	5549	
	w/ factory equip. rear coil spring	2"		2"	9144	8014	8509	9544	10104i	2208HB	9921	5449	5549	AV
		2"		3"	9144	8014	8509	9544	10104i	2208HB	9921	5449	5549	AV
		3"		3"	9139	8000	8509	9539	10103i	2208HB	9921	5449	5549	
97-02	Ford Expedition, Navigator (2WD)	2"		2" to 3"	9139	8000	8509	9539	10103i	2208HB	9921	5449	5549	BG
	w/ factory equip. rear air spring	2"		2" to 3"	9144	8014	8509	9544	10104i	2208HB	9921	5449	5549	AV, BG
		3"		2" to 3"	9139	8000	8509	9539	10103i	2208HB	9921	5449	5549	BG
FORD Truck and SUV 4WD Applications														
04+	Ford F-150 4WD	0"		1" or 3"			8537			2214EE				BC, BD
	All Cabs	0"		2" or 4"			8537			2214EE				BC
		2"		2" or 4"			8537			2214EE				BC
		3"		3" or 5"			8523			2213EE				BC, BD
		2"-3"		3" or 5"			8523			2213EE				BC, BD
			+2" to -2"	0" or 2"				9551	25002	2214EE				BC, BD
			+2" to -2"	2" or 4"				9551	25002	2214EE				BC
			+1" to -3"	3" or 5"				9502	25001	2213EE				BC, BD
	BT coilover Kits refer to page 11	0"-3"												
	#25002 front strut offers a 2" lift to 2" lowering range in 1/2" increments													
97-03	Ford F 150	1-3"		2"	9159	8024	8518	9559	10103D	10311B				
	All Cabs	1-3"		3"	9159	8024	8518	9559	10103D	10311B				
		1-3"		4"	9159	8024	8518	9559	10103D	10311B				
IMPORT Truck and SUV Applications														
BMW														
04+	BMW X3	1.4"-2.7"		1.2"-2.7"										
	BT coilover Kits refer to page 11													
00+	BMW X5	1.4"-2.7"		1.4"-2.7"										
	BT coilover Kits refer to page 11													
Honda														
05+	Honda Ridgeline	1.4"-2.6"		1.4"-2.6"										BF
	BT coilover Kits refer to page 11													
Isuzu														
96-03	Isuzu Hombre (6 Cyl.)	2"		2"	9124	8017	8502	9524	10102K	2412iF	9901	5420	5520	L,Q
		2"		2"	9117	8007	8502	9517	10101K	2412iF				L,Q
		2"-3"		3"	9117	8007	8502	9517	10101K	2412iF				L,Q
		2"		3"	9124	8017	8502	9524	10102K	2412iF	9901	5420	5520	L,Q
		3"		3"	9117	8007	8502	9517	10101K	2412iF	9901	5420	5520	L,Q
		4"-5"		5"	9116	8007	8530	9516	10101K	2410iF	9901	5420	5520	L,Q,AN
96-03	Isuzu Hombre (4 Cyl.)	2"		2"	9124	8017	8502	9524	10102K	2412iF	9901	5420	5520	L,Q
		2"		2"	9117	8007	8502	9517	10101K	2412iF				L,Q
		2"-3"		3"	9117	8007	8502	9517	10101K	2412iF				L,Q
		2"		3"	9124	8017	8502	9524	10102K	2412iF	9901	5420	5520	L,Q
		3"		3"	9117	8007	8502	9517	10101K	2412iF	9901	5420	5520	L,Q
		4"-5"		5"	9116	8007	8530	9516	10101K	2410iF	9901	5420	5520	L,Q,AN
Mazda														
98-04	Mazda B-2300/3000/4000 All Cabs	3"		3"	9133	8000	8514	9533	10103i	2210HE	9917	5444	5552	AL,Y
94-97	Mazda B-2300/3000/4000	3"		4"	9127	8013	8514	9527	10103H	2210HE	9917	5444	5552	J
	Std. Cab	3"		4"	9127	8013	8514	9527	10103H	2210HE	9917	5444	5552	J,Y
		5"		5.5"	9127	8013	8514	9527	10103H	2210HE	9917	5444	5552	J
94-97	Mazda B-2300/3000/4000	3"		4"	9127	8013	8514	9527	10103H	2210HE	9917	5444	5552	J
	Ext. Cab	3"		4"	9127	8013	8514	9527	10103H	2210HE	9917	5444	5552	J,Y
		5"		5.5"	9127	8013	8514	9527	10103H	2210HE	9917	5444	5552	J
Mitsubishi														
03+	Mitsubishi Outlander	0.9"-2.5"		0"-1.8"										
	BT coilover Kits refer to page 11													
83-97	Mitsubishi Pickup Series	2.5"		3"	9131	8000	8517	9531	10103i	2209HH	9918	5454	5554	Q
Nissan														
04-07	Nissan Titan	2"		4"			8534	9509	25009	2310FL	9919	5457	5557	AZ
			+2" to -2"	4"			8534	9509	25009	2310FL	9919	5457	5557	
	#25009 front strut offers 2" lift to 2" lowering range in 1/2" increments													
98-00	Nissan Frontier (all except crew cab)	2"		3"	9164	8008	8517	9564	10102C	2209HH				M,Y
83-97	Nissan Pickup & Hardbody	2"		3"							9920	5456	5556	M,Q,N
		2"		3"							9920	5456	5556	M, N
Porsche														
2002+	Porsche Cayenne, Cayenne S	1.4"-2.7"		1.4"-2.7"										BE
	BT coilover Kits refer to page 11													
Toyota														
2007+	Toyota Tundra	2"		4"				9566	25010	10311NE				AZ
	All cabs-V8 only		+2" to -2"	4"				9566	25010	10311NE				
	#25011 front strut offers 2" lift to 2" lowering range in 1/2" increments													
96-02	Toyota Tacoma (6 Cyl.)	2"		3"										Q
84-95	Toyota Pickup	2"		3"	9131	8000	8517	9531	10103i	2209HH	9921	5458	5558	Q
		2"		3"	9131	8000	8517	9531	10103i	2209HH	9921	5458	5558	
Volkswagen														
2002+	Volkswagen Touareg	1.4"-2.7"		1.4"-2.5"										BE
	BT coilover Kits refer to page 11													

NOTES

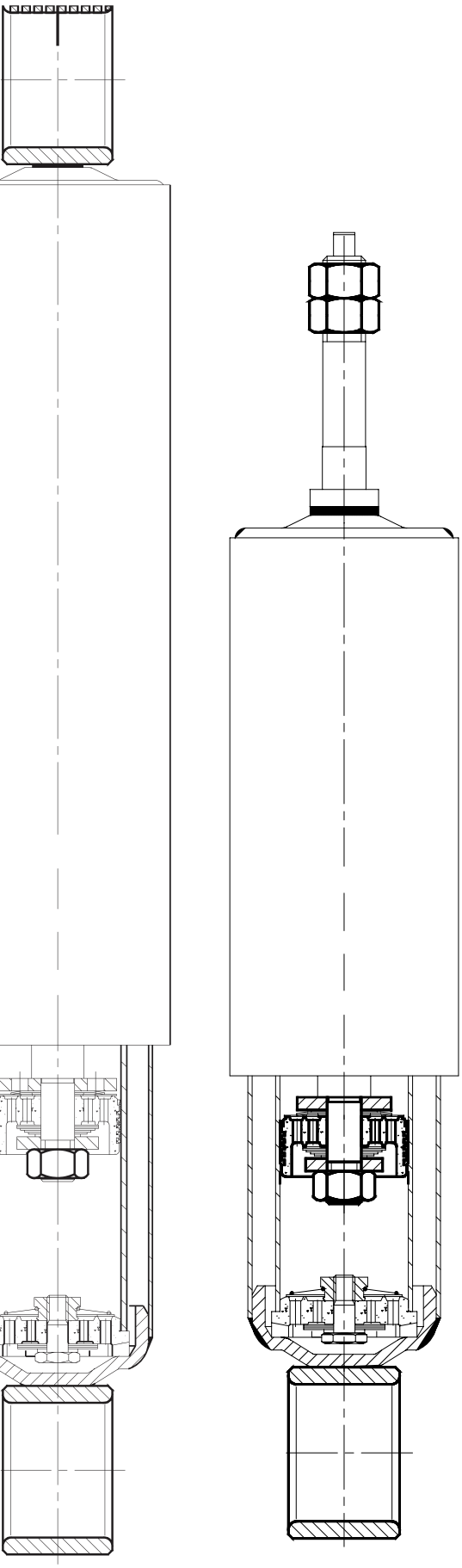

Belltech Shocks

Belltech Shocks are a great complement to any truck, stock, lowered or outfitted with aftermarket wheels

Nitro Drop 2

The completely new designed Nitro Drop 2 brings a high performance blend of internal valve technology and state of the art construction to your vehicle. The twin tube shock absorber features a “cavitation free” technology to keep your performing at it’s best during spirited driving. With oversized internal and external construction, this robust shock absorber is the perfect suspension upgrade.

- Belltech’s value orientated performance shock absorber
- Cavitation free valve train avoids air from decreasing the shock absorbers effectiveness
- Fully covered and durable metal dust boot provides a cleaner operating environment
- OEM quality rubber mounts featuring a vulcanized sleeve for maximum durability and stiffness

Street Performance

Belltech’s Street Performance shock absorber has been engineered to provide a premium quality ride for today’s larger trucks and luxury SUVs. Belltech engineers have developed a great balance between comfort and performance by focusing their attention on tuning the low speed compression and rebound characteristics of this shock absorber.

- Belltech’s Premium Performing shock absorber
- Excellent OEM quality replacement upgrade
- Oversized Construction provides additional damping control
- Complements larger OE and aftermarket wheel/tire packages for increased tire contact area

The “progressive” rebound tuning will complement large aftermarket wheels, keeping the ride smooth and firm. Belltech Street Performance shock absorbers are the ideal balance between performance and comfort.

Belltech Recommendation

Belltech recommends when installing lowering springs to also install shorter stroke shocks, such as the Nitro Drop 2 or the Street Performance shock absorbers.

When your suspension is lowered, the amount of travel within your shocks decreases and installing shorter stroke shocks is one way to optimize performance and safety.

Note OEM springs = for struts combined with OEM spring to provide additional life/lowering function
Note "spindles" = these shocks are designed for OEM replacement, 1" spring or spindle only lowerings
Note "springs" = for any 2"-3" spring or 2"-5" spring/spindle lowering we recommend shorter shocks

BELLTECH Shock Absorbers

YEAR	MODEL	FRONT Shocks: DESIRED LOWERING FRONT	FRONT Shocks: NOTE	FRONT Shocks: ND2 Part #	FRONT Shocks: SP Part #	REAR Shocks: DESIRED LOWERING REAR	REAR Shocks: NOTE	REAR Shocks: ND2 Part #	REAR Shocks: SP Part #
Chevrolet Colorado Applications									
04+	Colorado / Canyon All Cabs w/ ZQ8 Suspension (Lowering strut only fits 2004-06 Colorado / Canyon- strut for 2007+ models is TBA)	0"-2"	ball joint		25005	0"-3"	blocks	8530	2210iF
		2"-4"	springs		25005	3"-5"	leafs	8525	2208iF
Chevrolet S-Series 2 WD Applications									
82-03	S10 / S15 Std. & Ext. Cab Pickup Only (4 & 6 Cyl.)	0"-2"	spindles	8017	10102K	0"-3"	blocks	8502	2412iF
	S-10 Blazer / Jimmy / Extreme	2"-5"	springs	8007	10101K	3"-5"	leafs	8530	2410iF
Chevrolet S-Series 4 WD Applications									
82-04	S-10 / S-15 Pickup / Blazer	1"-3"	keys	8520	2105DD	1"-3"	blocks	8502	2412iF
						1"-3"	leafs	8530	2410iF
Chevrolet 1/2 Ton Fullsize Truck 2 WD Applications									
2007+	1/2-Ton Silverdo/Sierra (All Cabs)	+1" to -2"	OEM springs		25003	0"-1"		8536	2214FF
	(struts offer 1" lift to 2" lowering function in 1/2" increments)	1"-4"	spindles		25003	2"-4"		8504	2212FF
						5"-7"		8510	2210FF
05-06	1/2-TON Silverado Std & Ext. Cab Short Bed Only	0"-2"	spindles	8521	310400	0"-1"		8536	2214FF
	(with factory equip. front torsion bar)	2"-5"	keys	8521	310400	2"-4"		8504	2212FF
						5"-6"		8510	2209FF
04-06	1/2-TON Silverado CREW CAB (4DR)	0"-2"	spindles	8014	10104i	0"-1"		8536	2214FF
		2"-5"	springs	8000	10103i	2"-4"		8504	2212FF
						5"-7"		8510	2209FF
03-06	Silverado 1500 SS / Denali Sierra (AWD)	0"-2"	spindles	8521	310400	0"-1"		8536	2214FF
		2"-4"	keys	8521	310400	2"-4"		8504	2212FF
99-06	1/2-TON Silverado Std. & Ext. Cab Short Bed Only	0"-2"	spindles	8014	10104i	0"-1"		8536	2214FF
	(with factory equip. front coil spring)	2"-5"	springs	8000	10103i	2"-4"		8504	2212FF
						5"-7"		8510	2209FF
88-98	1/2-TON C-1500 Std & Ext. Cab	0"-2"	spindles	8000	10103i	0"-1"		8500	2216iF
		2"-4"	springs	8006	10102i	2"-4"		8535	2214iF
						5"-7"		8502	2212iF
90-94	1/2-TON C-1500 SS-454 ONLY.	0"-2"	spindles	8000	10103i	0"-1"		8500	2216iF
		2"-5"	springs	8006	10102i	2"-4"		8535	2214iF
						5"-7"		8502	2212iF
73-87	1/2-TON C-10 Pickup, 1/2-TON Blazer / Jimmy	0"-3"	spindle	8005	2104HA	0"-2"		8505	2212HF
		4"	springs	8005	2103HA	3"-6"		8511	2208HF
63-72	1/2-TON C-10 Pickup	0"		8005	2104HA	0"-1"			2210AA
		1"-3"	springs	8005	2103HA	2"-5"		8508	2208AA
97-00	3/4 & 1-TON	0"-3"	spindles	8000	10103i	0"-1"		8500	2216iF
	Single Rear Wheel-8 Lug Only & Crew Cab	2"-5"	springs	8006	10102i	2"-4"		8535	2214iF
						5"-8"		8502	2212iF
90-00	3/4 C-2500 Ext. & Crew Cab	0"-3"	spindles	8000	10103i	0"-1"		8500	2216iF
	Single Rear Wheel-8 Lug Only	2"-5"	springs	8006	10102i	2"-4"		8535	2214iF
						5"-8"		8502	2212iF
88-98	3/4-TON C-2500	0"-3"	spindles	8000	10103i	0"-1"		8500	2216iF
	ALL EXCEPT: 8-LUG	2"-5"	springs	8006	10102i	2"-4"		8535	2214iF
						5"-7"		8502	2212iF
Chevrolet 1 Ton Fullsize Truck 2 WD Applications									
97-00	1-TON SINGLE WHEEL	0"-3"	spindles	8000	10103i	0"-1"		8500	2216iF
	8-LUG.	2"-5"	springs	8006	10102i	2"-4"		8535	2214iF
						5"-8"		8502	2212iF
97-00	1-TON C-3500 Std./Ext Cab & Dually.	0"-3"	spindles	8000	10103i	0"-1"		8500	2216iF
		2"-5"	springs	8006	10102i	2"-4"		8535	2214iF
						5"-8"		8502	2212iF
97-00	1-TON C-3500 Crew Cab & Dually (8' Bed)	0"-3"	spindles	8000	10103i	0"-1"		8500	2216iF
		2"-5"	springs	8006	10102i	2"-4"		8535	2214iF
						5"-8"		8502	2212iF
92-96	1-TON C-3500 Crew Cab	0"-3"	spindles	8000	10103i	0"-1"		8500	2216iF
		2"-5"	springs	8006	10102i	2"-4"		8535	2214iF
						5"-8"		8502	2212iF
90-96	1-TON C-3500 Ext. Cab & Dually	0"-3"	spindles	8000	10103i	0"-1"		8500	2216iF
		2"-5"	springs	8006	10102i	2"-4"		8535	2214iF
88-89	1-TON C-3500 Ext. Cab & Dually	0"-3"	spindles	8000	10103i	0"-1"		8500	2216iF
		2"-5"	springs	8006	10102i	2"-4"		8535	2214iF
						5"-8"		8502	2212iF
75-91	1-TON C-30 Crew Cab & Dually Only	0"		8005	2104HA	0"-2"		8502	2212iF
		2"-4"	springs	8005	2103HA	2"-4"		8506	2209iF
Chevrolet Fullsize Truck 4 WD Applications									
07+	1/2-TON Silverado/Sierra	+1" to -2"	OEM springs		25003	0"-1"		8536	2214FF
	(struts offer 1" lift to 2" lowering function in 1/2" increments)	1"-4"	spindles		25003	2"-4"		8504	2212FF
						5"-7"		8510	2210FF
99-06	1/2-TON Silverado/Sierra Std. & Ext. Cab Short Bed Only	0"-2"	spindles	8521	310400	0"-1"		8536	2214FF
	(with factory equip. front coil spring)	2"-4"	keys	8521	310400	2"-4"		8504	2212FF
88-98	1/2 Ton C-1500 Std. & Ext. Cab	1"-3"	keys	8519	2105GD	0"-1"		8500	2216iF
						2"-4"		8502	2214iF
Chevrolet SUV 2 WD Applications									
2007+	Tahoe / Yukon / Yukon XL / Suburban / Avalanche	+1" to -2"	OEM springs		25003	+1" to 0"			2414FF
	Without Factory Autoride Shocks	1"-4"	spindles		25003	1"-2"		8522	2412FF
	(struts offer 1" lift to 2" lowering function in 1/2" increments)					3"-4"		8522	2410FF
2007+	Suburban/Yukon XL	+1" to -2"	OEM springs		25003	+1" to 0"			2414FF
	with Factory Autoride Shocks (Disables Autoride Feature)	1"-4"	spindles		25003	1"-2"		8522	2412FF
	(shocks offer 1" lift to 2" lowering function in 1/2" increments)					3"-4"		8522	2410FF
2007+	Chevy Avalanche	+1" to -2"	OEM springs		25003	+1" to 0"			2414FF
	Without Factory Autoride Shocks	1"-4"	spindles		25003	1"-3"		8522	2412FF
	(shocks offer 1" lift to 2" lowering function in 1/2" increments)					4"-5"		8522	2410FF

Note OEM springs = for struts combined with OEM spring to provide additional life/lowering function
Note "spindles" = these shocks are designed for OEM replacement, 1" spring or spindle only lowerings
Note "springs" = for any 2"-3" spring or 2"-5" spring/spindle lowering we recommend shorter shocks

BELLTECH Shock Absorbers		FRONT Shocks				REAR Shocks			
		DESIRED LOWERING		ND2	SP	DESIRED LOWERING		ND2	SP
YEAR	MODEL	FRONT	NOTE	Part #	Part #	REAR	NOTE	Part #	Part #
00-06	Tahoe / Yukon / Suburban / Yukon XL	0"-2"	spindles	8521	310400	0"-2"		8522	2412FF
	Without Factory Premium Ride Shocks	2"-4"	keys	8521	310400	3"-4"		8522	2410FF
00-06	Chevy Avalanche	0"-2"	spindles	8521	310400	0"-3"		8522	2412FF
	Without Factory Premium Ride Shocks (Including Z71)	2"-4"	keys	8521	310400	4"-5"		8522	2410FF
02-06	Trailblazer/Envoy	+1" to -2"	OEM springs		25011	0"-1"		8524	2212DD
	(struts offer 1" lift to 2" lowering function in 1/2" increments)					2"-3"		8532	2210DD
02-06	SSR	+1" to -2"	OEM springs		25011	0"-1.5"		8532	2210DD
92-99	Suburban 1/2-TON (2-WD)	0"-3"	spindles	8000	10103i	+1 to -1"		8535	2414iF
		2"-5"	springs	8006	10102i	2"-4"		8502	2412iF
						5"-7"		8506	2209iF
92-98	Suburban 3/4-TON 2 WD (6-LUG)	2"-3"	spindles	8000	10103i	+1 to -1"		8535	2414iF
		2"-5"	springs	8006	10102i	2"-4"		8502	2412iF
						5"-7"		8506	2209iF
95-99	Tahoe / Yukon 4 Door Only	0"-3"	spindles	8000	10103i	+1 to -1"		8535	2414iF
		2"-5"	springs	8006	10102i	2"-3"		8502	2412iF
						4"-5"		8506	2209iF
95-99	Tahoe / Yukon 2 Door Only	0"-3"	spindles	8000	10103i	+1 to -1"		8535	2414iF
		2"-5"	springs	8006	10102i	2"-4"		8502	2412iF
						5"-6"		8506	2209iF
73-91	Suburban 1/2-TON	0"-2"	spindles	8005	2104HA	0"-1"		8505	2212HF
	1-1/4" Rotor	2"-4"	springs	8005	2103HA	5"-6"		8511	2208HF
Chevrolet SUV 4 WD Applications									
2007+	Tahoe / Yukon / Yukon XL / Suburban / Avalanche	+1" to -2"	OEM springs		25003	+1" to 0"			2414FF
	Without Factory Autoride Shocks	1"-4"	spindles		25003	1"-2"		8522	2412FF
	(struts offer 1" lift to 2" lowering function in 1/2" increments)					3"-4"		8522	2410FF
2007+	Tahoe/Suburban/Yukon XL, & Avalanche	+1" to -2"	OEM springs		25003	+1" to 0"			2414FF
	with Autoride (Disables Autoride Feature)	1"-4"	spindles		25003	1"-2"			2412FF
	(struts offer 1" lift to 2" lowering function in 1/2" increments)					3"-4"			2410FF
2007+	Chevy Avalanche	+1" to -2"	OEM springs		25003	+1" to 0"			2414FF
	Without Factory Autoride Shocks	1"-4"	spindles		25003	1"-3"		8522	2412FF
	(struts offer 1" lift to 2" lowering function in 1/2" increments)					4"-5"		8522	2410FF
00-06	Chevy Avalanche **Without** Factory Premium Ride Shocks	0"-2"	spindles	8521	310400	0"-2"		8522	2412FF
	(Including Z71)	2"-4"	keys	8521	310400	3"-4"		8522	2410FF
00-06	Tahoe / Yukon / Suburban / Yukon XL	0"-2"	spindles	8521	310400	0"-3"		8522	2412FF
	Without Factory Premium Ride Shocks	2"-4"	keys	8521	310400	4"-5"		8522	2410FF
95-99	Tahoe, Yukon, Escalade & Denali (4 door only)	0"-3"	keys	8519	2105GD	+1 to -1"		8535	2414iF
				8519	2105GD	2"-4"		8502	2412iF
92-99	Suburban	0"-3"	keys	8519	2105GD	+1 to -1"		8535	2414iF
	K-1500 only			8519	2105GD	2"-4"		8502	2412iF
92-99	Tahoe, Yukon (2 door only)	0"-3"	keys	8519	2105GD	+1 to -1"		8535	2414iF
				8519	2105GD	2"-4"		8502	2412iF
92-94	Blazer Full Size (4 door only)	0"-3"	keys	8519	2105GD	+1 to -1"		8535	2414iF
				8519	2105GD	2"-4"		8502	2412iF
Chevrolet Van Applications									
85-02	Astro & Safari Van 2-WD	2"-4"		8000	10103i	2"-4"		8532	2210DD
Chevrolet Car Applications									
92-96	Caprice / Roadmaster	1"-3"		8000	10103i	2"-3"		8512	2209iH
92-96	Impala SS	1"-2"		8000	10103i	1"-2"		8512	2209iH
80-86	Buick: Century, Pontiac: Bonneville,	1"-2"		8006	10102i	1"-2"		8512	2209iH
80-87	G-Body (El Camino, Regal, GN, Malibu, Monte Carlo S/S, Grand Prix, Le Mans	1"-2"		8006	10102i	1"-2"		8512	2209iH
80-88	Olds: Cutlass, 442, Salon	1"-2"		8006	10102i	1"-2"		8512	2209iH
Dodge Truck & SUV 2 WD Applications									
98-03	Durango	0"		8006	10102i	0"-1"			2214DD
		1"-3"	springs	8009	10101i	2"		8524	2212DD
97-04	Dakota (All Cabs)	0"		8006	10102i	0"-1"			2214DD
		1"-3"	springs	8009	10101i	2"-4"		8524	2212DD
97-04	Dakota R/T	1"	springs	8009	10101i	0"-1"			2214DD
						2"		8524	2212DD
87-96	Dakota	0"-2"	spindles	8006	10102i	0"-1"			2212iD
		2"-4"	springs	8009	10101i	2"-4"		8513	2210iD
2006+	Dodge Ram 1500 Std. & Quad CAB	0"		8001	10603i	0"-2"		8536	2215FF
		1"-3"	springs	8006	10602i	3"-5"		8504	2212FF
02-05	Dodge Ram 1500 Std. & Quad CAB	0"		8001	10603i	0"-2"		8536	2215FF
		1"-3"	springs	8006	10602i	3"-5"		8504	2212FF
94-01	Dodge Ram 1500 Std. & EXT CAB.	0"-3"	spindles	8004	10603F	0"-1"		8536	2215FF
		3"-5"	springs	8010	10602F	2"-4"		8504	2212FF
						5"-7"		8510	2209FF
94-02	Dodge Ram 2500 & 3500 V-10 & Diesel	0"		8004	10603F	0"-1"		8536	2215FF
		1"-3"	springs	8010	10602F	2"-4"		8504	2212FF
Ford Truck & SUV 2 WD Applications									
98-03	Ford Ranger Std. Cab and Ext. Cab	3"	3"	8000	10103i	2"-4"		8514	2210HE
89-97	Ford Ranger Std. & Ext. Cab	2"-5"	spindles	8013	10103H	4"-5.5"		8514	2210HE
2004+	Ford F150 2WD All Cabs	+1 to -3"	OEM springs		25001	0"-1"		8537	2214EE
	(lowering strut offers up to 3" lowering in 1/2" increments)	1"-4"	spindles		25001	2"-3"		8523	2213EE
						4"-5"		8523	2211EE
97-03	Ford F150, F250 Light Duty	0"-2"	spindles	8014	10104i	+1 to -1"			10314B
	(All Cabs)	3"-5"	springs	8000	10103i	2"-4"		8518	10311B
						6"		8518	10309B
97-03	Ford Lightning & Harley Series	0"-2"		8000	10103i	0"-1"		8518	10311B
						2"-3"		8518	10309B

Note OEM springs = for struts combined with OEM spring to provide additional life/lowering function
Note "spindles" = these shocks are designed for OEM replacement, 1" spring or spindle only lowerings
Note "springs" = for any 2"-3" spring or 2"-5" spring/spindle lowering we recommend shorter shocks

BELLTECH Shock Absorbers		FRONT Shocks				REAR Shocks			
		DESIRED LOWERING		ND2	SP	DESIRED LOWERING		ND2	SP
YEAR	MODEL	FRONT	NOTE	Part #	Part #	REAR	NOTE	Part #	Part #
87-96	Ford F150 Std. & Ext. Cab.	3"	I-beam	8002	10104B	1"-4"		8503	2211HB
		2"-5"	springs	8002	10103B	7"		8509	2208HB
87-98	F-250/350 Std./Ext./Crew Cab (Dually only)	1"-3"	springs	8002	10103B	2"-4"		8503	2211HB
97-02	Ford Expedition, Navigator (2WD)	0"-2"	spindles	8014	10104i	0"		8503	2211HB
		2"-3"	springs	8000	10103i	1"-3"		8509	2208HB
Ford Truck 4 WD Applications									
2004+	Ford F150 4WD All Cabs	+2 to -2"	OEM springs		25002	+1 to -1"	OEM Blocks		2216EE
	(lifting shock 25002 offers 2" lift up to 2" lowering in 1/2" steps)	0"-4"	spindles		25002	1"-2"		8537	2214EE
	(lowering strut 25001 offers 2" to 4" lowering in 1/2" increments)	2"-4"	OEM springs		25001	3"-5"		8523	2213EE
97-03	Ford F 150 (All Cabs)	0"-3"	keys	8024	10103D	0"-1"			10314B
						2"-4"		8518	10311B
Import Truck & SUV 2 WD Applications									
96-03	Isuzu Hombre (4 & 6 Cyl.)	0"-2"	spindles	8017	10102K	0"-3"	blocks	8502	2412iF
		2"-5"	springs	8007	10101K	3"-5"	leafs	8530	2410iF
98-04	Mazda B-2300/3000/4000 Std. & Ext Cab.	3"	springs	8000	10103i	3"		8514	2210HE
94-97	Mazda B-2300/3000/4000 Std. & Ext. Cab	2"-5"	spindles	8013	10103H	4"-5.5"		8514	2210HE
83-97	Mitsubishi Pickup Series	2.5"	springs	8000	10103i	3"		8517	2209HH
2004+	Nissan Titan	+2" to -2"	OEM springs		25009	+1" to -1"			2313FL
						2"-4"			2310FL
98-03	Nissan Frontier ALL EXCEPT: Crew Cab	2"	spindles	8008	10102C	3"		8517	2209HH
2007+	Toyota Tundra	+2" to -2"	OEM springs		25010	+1" to -1"			10314NE
						2"-4"			10311NE
84-95	Toyota Pickup	2"	spindles	8000	10103i	3"		8517	2209HH

Belltech Shock Fitment Guide

With Belltech Shock Fitment Guide you'll be able to cater to customers who require a semi-custom shock absorber setup. From the guide you'll be able to determine extended and collapsed lengths, style of shock end fitments and size of bushings required.

Belltech´s smart part # system for the new Street Performance shocks - for example: Tahoe 2007 rear shock part# "2412FF"

2 4 12 F F

- 2 — Loop / Loop design shock body
- 4 — "Heavy Duty" or SUV valve setup
- 12 — Length code #12 - extended 22.5" / collapsed 14"
- F — Bushing code for top bushing - inside diameter 15mm / outside 42mm
- F — Bushing code for bottom bushing - inside diameter 15mm / outside 42mm

LENGTH DIMENSIONS					SHOCK BODIES							
					FRONT				REAR			
Length code#	ext. in inch	coll. in inch	ext. in mm	coll. in mm	Pin/Loop standard	Pin/Loop heavy duty	Loop/Loop standard	Pin/Fork standard	Loop/Loop standard	Pin/Loop advanced	Loop/Loop advanced	Loop/Loop heavy duty
Valve					1	6	1	1	2	3	3	4
0	11.75	8.00	298	203	10100	10600						
1	12.50	8.50	318	216	10101	10601						
2	13.25	9.00	337	229	10102	10602						
3	14.00	9.50	356	241	10103	10603	2103	310300				
4	14.75	10.00	375	254	10104	10604	2104	310400				
5	15.75	10.50	400	267	10105	10605	2105	310500				
6	16.50	11.00	419	279								
7	17.50	11.50	445	292					2207			
8	18.50	12.00	470	305					2208			
9	19.50	12.50	495	318					2209	10309		2409
10	20.50	13.00	521	330					2210		2310	2410
11	21.50	13.50	546	343					2211	10311		2411
12	22.50	14.00	572	356					2212			2412
13	23.50	14.50	597	368					2213		2313	2413
14	24.50	15.00	622	381					2214	10314		2414
15	25.50	15.50	648	394					2215			2415
16	26.50	16.00	673	406					2216			2416
17	27.50	17.00	699	432					2217			2417
18	28.50	17.50	724	445					2218			2418

Shock bodies used in Belltech´s new Street Performance program (stock items)
Additional shock bodies for Private Label programs or special offers (may have lead times)

+

BUSHINGS APPLICATION LIST

Bushing code#	inside in mm	width in mm
A	13	35
B	13	38
C	13	32
D	13	42
E	12	39
F	15	42
G	13	62
H	16	33.5
L	15	48
i	bar pin closed	
K	bar pin open	
N	bar pin adapter	

PLEASE NOTE:

1) all **Pin/Loop** shock bodies come with steam bushings and special washers

2) OEM style rubber silent bushings have to be choosen according our application list - or customer specs. (just for custom solutions - not SP part#)

Belltech Lift & Lowering Struts

Belltech engineers specifically designed McPherson type front struts with relocated spring seat mounts to allow for different spring seat positions. Depending on spacer configurations, the shock produces varying ride heights in 1" increments within a 0"-2" range. The struts utilize Belltech's own "Street Performance" shock technology providing you with the perfect balance of comfort, performance and ride height flexibility.

			Ride Height	Front Shock	FOOTNOTES
Chevrolet					
04-07	Colorado / Canyon 4 & 5 Cyl. (All Cabs)	Lower/Lift	-1" to 0"	25005	BM
07+	Silverado / Sierra	Lower/Lift	-2" to +1"	25003	
07+	Tahoe, Yukon, Yukon XL, Suburban, Avalanche	Lower/Lift	-2" to +1"	25003	
04-07	Trailblazer/Envoy	Lower/Lift	-2" to +1"	25011	
Ford F-150					
04+	F-150 2WD (Std., Ext. & Quad Cab)	Lower/Lift	-3" to +1"	25001	
04+	F-150 4WD (Std., Ext. & Quad Cab)	Lower/Lift	-3" to +1"	25001	
		Lower/Lift	-2" to +2"	25002	
Nissan					
04+	Titan	Lower/Lift	-2" to -2"	25010	
Toyota					
07+	Tundra	Lower/Lift	-2" to -2"	25009	

Each lift & lowering strut sold separately

The image below provides you a visual reference of the relocation of the spring seat mount. Different spacer combinations will provide you a variety of ride height choices.

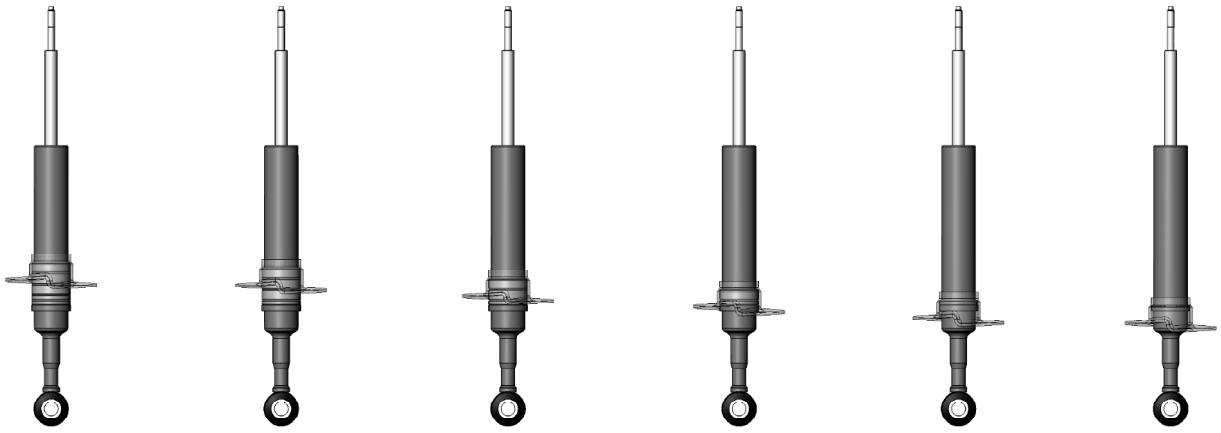

1.0" Lifted | 0.5" Lifted | 0" Stock | 0.5" Lowered | 1.5" Lowered | 2.0" Lowered

NOTES

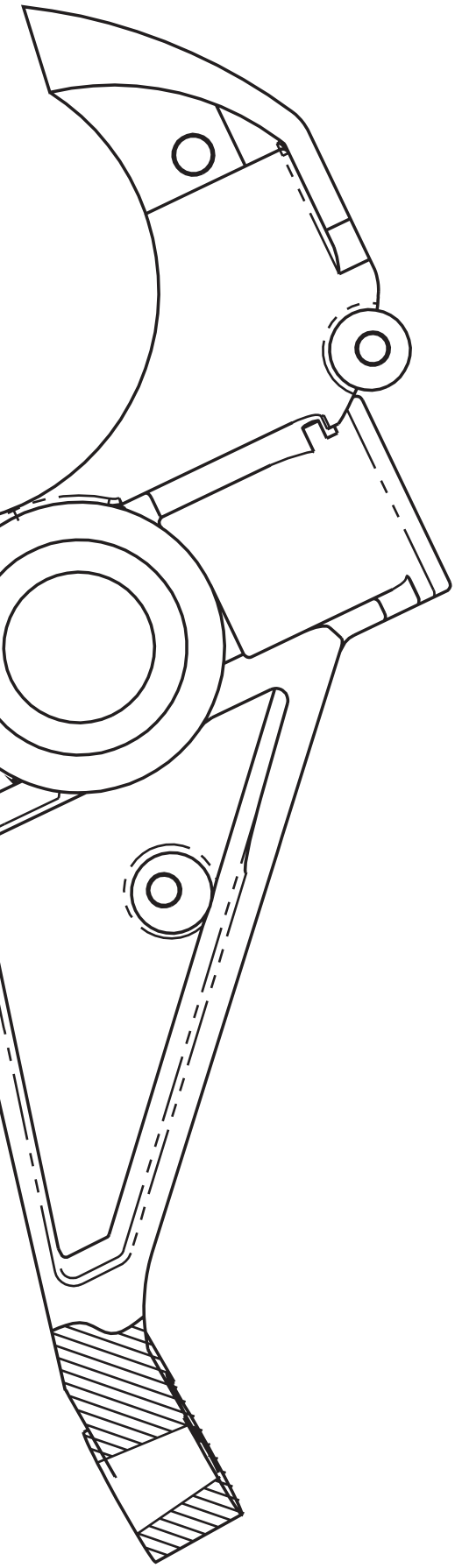

Belltech Components

Belltech offers their Components individually, listed in their appropriate sections.

Drop Spindles	**38**
Drop Ball Joints	**38**
Front I-Beams	**39**
Lifting & Lowering Struts	**35**
Spring Spacers	**39**
Front Coil Springs	**40-41**
Rear Coil Springs	**41**
Leaf Springs	**42**
Lowering Block Kits	**42**
Hanger Kits	**42-43**
Shackle & Hanger Kits	**43**
Shackle Kits	**44**
Flip Kits & C-Section Kits	**44-45**
Accessories	**45-46**
Transmission Crossmember	
Shock Extensions	
Drive Line Alignment Kits	
Pinion Shims	
Front End Alignment Kits (Caster/Camber)	
Airjack Accessories	
Bumpstops	
Handle Relocator	
Airjack Suspension	**46**
Anti-Sway Bars	**47**

Belltech Drop Spindles

Drop Spindles - 2WD Application Range					
Year	Model		Drop	Part #	FOOTNOTES
Chevrolet S-Series					
82-03	4 & 6 Cyl. Std & Ext. Cab		2"	2100	
98-03	Blazer/Jimmy		2"	2102	
83-97	Blazer/Jimmy		2"	2100	
Chevrolet/GMC Full Size Truck					
2007	Silverado / Sierra	2WD & 4WD	2"	2509	AT
99-06	1/2 Ton Chev (all cabs)	2WD & 4WD	2"	2508	AT
99-00	1/2 Ton Chev (all cabs)		2"	2505	AK
	Replacement Lower Ball Joint for 2505 spindle			2506	
88-98	1/2 Ton Chev (Ext. cab)		2"	2500	
92-98	1/2 Ton Chev (Std. cab)		2"	2500	
88-91	1/2 Ton Chev (Std. cab)		2"	2400	
73-87	1/2 Ton Chev (Heavy duty brake - w/ 1.25" thick rotor)		3"	3100	F
73-87	1/2 Ton Chev (Light duty brake - w/ 1" thick rotor)		3"	3200	F
71-72	1/2 Ton Chev C-10		3"	3120	
01+	HD 1500, 2500, 3500 (8-lug)	2WD & 4WD		2550	AT
90-00	3/4 Ton Chev (All cabs)		3"	3700	
88-98	3/4 Ton Chev (Six Lug- All cabs)		2"	2500	
89-00	1-Ton Chev (All cabs)		3"	3700	
1988	1-Ton Chev (All cabs)		3"	3600	
75-91	1-Ton Chev (All cabs)		3"	3500	
Chevrolet SUV					
2007	Tahoe, Yukon,	2WD & 4WD	2"	2509	AT
2007	Suburban, Yukon XL	2WD & 4WD	2"	2509	AT
2007	Avalanche	2WD & 4WD	2"	2509	AT
2007	Escalade, Denali	2WD & 4WD	2"	2509	AT
00-06	Tahoe, Yukon	2WD & 4WD	2"	2508	AT
00-06	Suburban, Yukon XL	2WD & 4WD	2"	2508	AT
00-06	Avalanche	2WD & 4WD	2"	2508	AT
00-06	Escalade, Denali	2WD & 4WD	2"	2508	AT
92-99	Suburban & 6 Lug 3/4 Ton		2"	2500	
95-99	Tahoe, Yukon (2 & 4 door)		2"	2500	
73-91	Suburban (Heavy duty brake - w/ 1.25" thick rotor)		3"	3100	F
73-91	Suburban (Light duty brake - w/ 1" thick rotor)		3"	3200	F
Chevrolet Astro Van					
85-02	Astro/Safari		2"	2700	L
GM Car					
92-96	Impala SS / Caprice		2"	2105	B
92-96	Roadmaster Sedan / Wagon		2"	2105	
80-88	Olds Cutlass, 442, Salon		2"	2100	
80-87	El Camino, Sprint, Regal, Grand National		2"	2100	
80-87	Malibu, Monte Carlo SS		2"	2100	
80-87	Grand Prix, LeMans		2"	2100	
82-86	Pontiac Bonneville		2"	2100	
80-81	Buick Century		2"	2100	
Dodge Truck					
94-99	Ram 1500 Std. & Ext. Cabs		2"	2650	
	Replacement Lower Ball Joint for 2650 Spindle			2651	
91-96	Dakota		2"	2605	
87-90	Dakota		2"	2600	
Ford Truck					
97-03	F-150 Std. Ext. & Crew Cab 97-02 Expedition		2"	2350	AV
04+	F-150 Std. Ext. & Crew Cab		2"	2351	BB
Import Truck					
96-00	Isuzu Hombre		2"	2100	
98-00	Nissan Frontier (All Except Crew Cab)		2"	2010	
83-97	Nissan Pickup & Hardbody		2"	2005	
84-00	Toyota Pickup		2"	2000	

Belltech Drop Ball Joints

Front Lowering Ball Joint				
Year	Model	Drop	Part #	FOOTNOTES
Chevrolet Colorado Applications				
04-07	Std ,Ext, & Quad Cabs 4 & 5 Cyl.Including ZQ8	2"	2103	

Belltech Front I-Beams

Front I-Beams				
Year	Model	Drop	Part #	FOOTNOTES
Ford Truck				
89-97	Ranger Std. & Ext. Cab	3"	4005	
	I-Beam Hardware Kit		4004	
Import Truck				
94-97	Mazda B-Series Std. & Ext. Cabs	3"	4005	
	I-Beam Hardware Kit		4004	

Belltech Spring Spacers

		Spring Distance Spacers			Leveling Spacers	
Year	Model	Ride Height Change APPROX.	Front part #	Rear part #	Leveling Range	Front Part#
Chevrolet S-Series						
82-03	4 & 6 Cyl. Std. & Ext. Cab	1"	34852		3/4"	4930
98-03	Blazer/jimmy	1"	34852		3/4"	4930
99-03	Extreme P/U	1"	34852		3/4"	4930
83-97	Blazer/Jimmy 4 & 6 Cyl.	1"	34852		3/4"	4930
Chevrolet Colorado						
04-07	Std. Cab 4 & 5 Cyl.	1"	34854		1" (3 x 5/16")	34932
04-07	Ext. & Quad Cab 4 & 5 Cyl.	1"	34854		1" (3 x 5/16")	34932
Chevrolet Full Size Truck						
99-06	1/2 Ton Chevy/GMC (all cabs)	1"	34853		3/4"	34931
88-98	1/2 Ton Chevy/GMC (all cabs & 454 SS)	1"	34852			
97-00	3/4 Ton Chevy/GMC (All cabs)	1"	34850			
90-96	3/4 Ton Chevy/GMC (All cabs)	1"	34852			
88-98	3/4 Ton Chevy/GMC (Six lug- all cabs)	1"	34852			
97-00	1-Ton Chevy/GMC (All cabs)	1"	34850			
88-96	1-Ton Chevy/GMC (All cabs)	1"	34852			
75-91	1-Ton Chevy/GMC (All cabs)	1"	34852			
Chevrolet SUV						
2007	Tahoe, Yukon, Yukon XL, Suburban, Avalanche	0.5" or 1"	34855	35323		
00-06	Tahoe, Yukon	1"	N/A	35323		
00-06	Suburban, Yukon XL	1"	N/A	35323		
00-06	Avalanche	1"	N/A	35323		
92-99	Suburban & 6 Lug 3/4 Ton	1"	34852	N/A		
95-99	Tahoe, Yukon (2 & 4 door)	1"	34852	N/A		
Ford Truck						
04-06	F-150 Std. Ext. & Quad Cabs	1"	34856			
97-03	F-150 Std. Ext. & Crew Cab (all models)	1"	34852			
98-03	Ranger Std. & Ext. Cab (ex. Edge Model)	1"	34852			
Dodge Truck						
02-06	Ram 1500 Std. & Quad Cab (include. HEMI)	1"	34852			
94-99	Ram 1500 Std.& Ext. Cab 8 Cyl.	1"	34852			
98-03	Durango	1"	34850			
97-04	Dakota Std. Ext. & Quad Cabs 6 & 8 Cyl.	1"	34850			
97-04	Dakota RT	1"	34850			
Import Truck						
96-00	Isuzu Hombre 6 Cyl.	1"	34852			
96-00	Isuzu Hombre 4 Cyl.	1"	34852			
98-04	Mazda B-Series Std & Ext. Cab	1"	34852			

Belltech Front Coil Springs

		Belltech Front "PRO" Coils		Belltech Front Coils			
Front Springs and Torsion Bar Keys							
		Coil Spring and Spacer Kit		**Front Coil Springs and Torsion Bar Keys**			**FOOTNOTES**
		Desired Drop		**Desired Drop**			
Chevrolet S-Series Applications		**1" or 2"**	**2" or 3"**	**1"**	**2"**	**3"**	
82-93	4 cyl- 6 Cyl std. & ext cab		23225	4200	4220	4225	
94-04	6 Cyl std. & ext cab		23227	4202	4223	4227	
94-04	4 Cyl std. & ext cab		23225	4200	4220	4225	
98-03	Blazer/Jimmy		23228	4024	4226	4228	
98-03	Blazer Xtreme			4228	N/A	N/A	
99-04	Extreme P/U			4227	N/A	N/A	
83-97	Blazer/Jimmy 4cyl		23225	4200	4220	4225	
83-97	Blazer/Jimmy 6cyl		23227	4202	4223	4227	
02-07	Trailblazer/Envoy				4207		
02-07	SSR+SS Trailblazer			4207 (1.5")			
Chevrolet Colorado Applications		**1" or 2"**	**2" or 3"**	**1"**	**2"**	**3"**	**FOOTNOTES**
04-07	Chevrolet Colorado / Canyon Std. Cab 4 & 5 Cyl.	12203		4201	4203		
04-07	Chevrolet Colorado / Canyon Ext. & Quad Cab 4 & 5 Cyl.	12206		4205	4206		
Chevrolet Astro Van Applications				**1"**	**2.5"**		**FOOTNOTES**
85-02	Astro/Safari			4250	4252		L
Chevrolet Fullsize Truck Applications		**1" or 2"**	**2" or 3"**	**1"**	**2"**	**3"**	**FOOTNOTES**
2007	Silverado / Sierra Ext & Crew Cabs (New Body Style)	12463					
2007	Silverado / Sierra Std Cab. (New Body Style)	12464					
99-06	1/2 Ton Chev/GMC (Ext. & Crew cabs) incl. 07 Classic Body		23458	4454	4456	4458	
99-06	1/2 Ton Chev/GMC (Std. cab) incl. 07 Classic Body		23408	4302	4402	4408	
88-98	1/2 Ton Chev/GMC (Ext. cab & 454 SS)		23452	4445	4450	4452	C
88-98	1/2 Ton Chev/GMC (Std. cab)		23405	4300	4400	4405	C
63-87	1/2 Ton Chev/GMC (Small block eng. only)			4700	4702	N/A	
97-00	3/4 Ton Chev/GMC (All cabs)	12604		4605	4604	N/A	A
90-96	3/4 Ton Chev/GMC (All cabs)	12600		4601	4600	N/A	A,C
88-98	3/4 Ton Chev/GMC (Six lug- all cabs)		23452	4445	4450	4452	A,C
97-00	1-Ton Chev/GMC (All cabs)	12604		4605	4604	N/A	A
88-96	1-Ton Chev/GMC (All cabs)	12600		4601	4600	N/A	A,C
75-91	1-Ton Chev/GMC (All cabs)			N/A	4500	N/A	A
Chevrolet SUV Applications		**1" or 2"**	**2" or 3"**	**1"**	**2"**		**FOOTNOTES**
2007	Tahoe, Yukon, Suburban, Yukon XL, Avalanche	12462					
2007	Escalade, ESV, EXT, & Denali with factory Autoride	12463					
					Front Key 1"-2"		**FOOTNOTES**
00-06	Tahoe, Yukon				3921		
00-06	Suburban, Yukon XL				3921		
00-06	Avalanche				3921		
01-06	Escalade, Denali				3921		
92-94	Blazer Full Size (4 door only)				3921		
92-99	Suburban				3921		
92-99	Suburban & 6 Lug 3/4 Ton		23452	4445	4450	4452	A
95-99	Tahoe, Yukon (2 & 4 door)		23452	4445	4450	4452	
GM Car Applications							
92-96	Impala SS (1.5")			5106			
Dodge Truck Applications		**1" or 2"**	**2" or 3"**	**1"**	**2"**	**3"**	**FOOTNOTES**
06-07	Ram 1500 Std. & Quad Cab				4759		
02-05	Ram 1500 Std. Cab (include. HEMI)				4756		
02-05	Ram 1500 Quad Cab (include. HEMI)				4758		
94-99	Ram 1500 Std. Cab 8Cyl.		23754	4750	4752	4754	
94-99	Ram 1500 Ext. Cab 8Cyl.		23754	4750	4752	4754	
94-00	Ram 2500 V-10 & Diesel					4776	
94-99	Ram 3500 V-10 & Diesel					4776	
98-03	Durango				4765		
97-04	Dakota Std. Ext. & Quad Cabs 8Cyl.				4764		
97-04	Dakota Std. Ext. & Quad Cabs 6Cyl.				4766		
97-04	Dakota RT			4764			AP
91-96	Dakota Std. Cab 8Cyl.				4761		
87-90	Dakota Std. Cab 8Cyl.				4761		
Ford Truck Applications		**1" or 2"**	**2" or 3"**	**1"**	**2"**	**3"**	**FOOTNOTES**
04-07	F-150 Std. Ext. & Quad Cabs		23807		4806	4807	
97-03	F-150 Std. Ext. & Crew Cab		23804		4803	4804	AJ,AM
97-03	F-150 Harley Edition	23804		4803	4804		AJ,AM,AP
97-04	F-150 Lightning			4804			AJ,AM,AP
87-96	F-150 Std. & Ext. Cab				4800		A
98-03	Ranger Std. & Ext. Cab (ex.Edge Model)					4797	AL
89-97	Ranger Std. & Ext. Cab				4794		
97-98	F-250/350 Dually Only (No Diesel)				4805		

Belltech Front Coil Springs (cont.)

Front Springs and Torsion Bar Keys		Belltech Front "PRO" Coils		Belltech Front Coils			
		Coil Spring and Spacer Kit		Front Coil Springs and Torsion Bar Keys			FOOTNOTES
		Desired Drop		Desired Drop			
Ford SUV Applications		1" or 2"	2" or 3"	1"	2"	3"	FOOTNOTES
02-05	Ford Explorer				4810		
03-05	Ford Expedition, Navigator (2WD)		23807			4807	
97-02	Ford Expedition, Navigator (2WD)		23804		4803	4804	
Import Truck Applications		1" or 2"	2" or 3"	1"	2"	3"	FOOTNOTES
96-00	Isuzu Hombre 6 Cyl.		23227	4202	4223	4227	
96-00	Isuzu Hombre 4 Cyl.		23225	4200	4220	4225	
98-04	Mazda B-Series Std & Ext. Cab					4797	AL
94-97	Mazda B-Series Std & Ext. Cab				4794		
83-97	Mitsubishi Pickup					4270 (2.5")	
04-07	Nissan Titan				4809		
07+	Toyota Tundra 8 Cyl.				4263		
96-04	Toyota Tacoma 6 Cyl.				4260		

Belltech Rear Coil Springs

Rear Coil Springs		Belltech Rear "PRO" Coils		Belltech Rear Coils				
All rear SUV kits come with bumpstops								
Year	Applications	Kit		Rear Coil Springs				
Chevrolet SUV Applications		Desired Drop		Desired Drop				
(WITH FACTORY AUTO RIDE SHOCKS)			2.5" or 3.5"	2"	3"	4"	5"	FOOTNOTES
2007	Tahoe, Yukon, Suburban, Yukon XL, Escalade		34324					
(WITHOUT FACTORY AUTO RIDE SHOCKS)			3" or 4"	2"	3"	4"	5"	FOOTNOTES
2007	Tahoe, Yukon		23323	5321		5323		AQ
2007	Yukon XL, Suburban		23305	5301	5304	5305		AQ
2007	Avalanche				5301	5304	5305	AQ
(WITH FACTORY PREMIUM RIDE SHOCKS)			2" or 3"	1"	2"	3"	4"	FOOTNOTES
00-06	Tahoe, Yukon, Suburban, Yukon XL		23305	5301	5304	5305		AR
00-06	Avalanche				5301	5304	5305	AR
(WITHOUT FACTORY PREMIUM RIDE SHOCKS)		3" or 4"	4" or 5"	2"	3"	4"	5"	FOOTNOTES
00-06	Tahoe, Yukon,	23305		5301	5304	5305	N/A	AQ
00-06	Suburban, Yukon XL	23305		5301	5304	5305	N/A	AQ
00-06	Avalanche		23305		5301			AQ
				1.5"	3"			
02-06	Trailblazer, Envoy 2WD/4WD				4230			
02-06	SSR			4230				
Chevrolet Full Size				2"	3"	4"	5"	FOOTNOTES
63-72	1/2 Ton C-Pickup			5352	5353	5354	5355	
GM Car Applications				Rear Coil Springs				
				Drop	part#	FOOTNOTES		
92-96	Impala SS / Caprice			1.5"	5107			
92-96	Caprice / Roadmaster Wagon			2.75"	5105			
80-88	Olds Cutlass, 442, Salon			1.5"	5100			
80-87	El Camino, Sprint, Regal, Grand National			1.5"	5100			
80-87	Malibu, Monte Carlo SS, Grand Prix, Le Mans			1.5"	5100			
82-86	Pontiac Bonneville			1.5"	5100			
80-81	Buick Century			1.5"	5100			
Ford SUV Applications				2"	3"	4"		
02-05	Ford Explorer			5310 (2.5")				
03-05	Ford Expedition, Navigator (2WD)			5309				
97-02	Ford Expedition, Navigator (2WD)			5307				
97-02	Ford Expedition, Navigator (2WD)				5308			

Belltech Leaf Springs

Rear Leaf Springs (Each Leaf Sold Separatly)				
Year	**Model**	**Drop**	**Part #**	**FOOTNOTES**
Chevrolet Colorado				
04-07	Std, Ext, & Quad Cabs 4 & 5 Cyl.	3"	5953	
Chevrolet S-Series				
82-03	4&6 Cyl. Std. & Ext. Cabs	3"	5954	AN
95-97	Blazer/Jimmy	3"	5956	AN
98-03	Blazer/Jimmy	3"	5964	AN
83-94	Blazer/Jimmy	3"	5954	AN
Chevrolet Full Size Truck				
99-06	1/2 Ton Chev (Std. & Ext. cab)	3"	5952	
88-98	1/2 Ton Chev (Std. & Ext. cab)	4"	5950	
Chevrolet SUV				
92-99	Suburban & 6 Lug 3/4 Ton	3"	5962	
95-99	Tahoe, Yukon (2 Door only)	3.5"	5960	
Chevrolet Astro Van				
95-02	Astro/Safari (with factory steel leaf)	3"	5958	L
Dodge Truck				
05+	Ram 1500 Std. & Quad Cab (include. HEMI)	3"	5988	
02-06	Ram 1500 Std. Cab (include. HEMI)	3.5"	5987	
02-06	Ram 1500 Quad Cab (include. HEMI)	3"	5988	
94-99	Ram 1500 Ext. Cab 8Cyl. (All except Long Bed)	4"	5985	
97-04	Dakota Std. Ext. & Quad Cabs	3"	5983	
98-03	Durango	2"	5984	
Ford Truck				
04-06	F-150 Std. Ext. & Quad Cabs	3"	5982	
97-03	F-150 Std. Ext. & Crew Cab	3"	5986	
98-03	Ranger Std. & Ext. Cab	3"	5980	
89-97	Ranger Std. & Ext. Cab	4"	5970	
Import Truck				
96-00	Isuzu Hombre 4 & 6 Cyl.	3"	5954	
98-04	Mazda B-Series Std & Ext. Cab	3"	5980	
94-97	Mazda B-Series Std & Ext. Cab	4"	5970	
83-97	Nissan Pickup & Hardbody	3"	5974	
84-95	Toyota Pickup	3"	5978	
79-83	Toyota Pickup	3"	5976	

Belltech Lowering Block Kits

Year	Model	Drop			FOOTNOTES
		1"	2"	3"	
All	Mini & Midsize Pickups with 2.5" & 3" Wide Leaf Springs	6000	6100	6200	Q
All	Mini & Midsize Pickups with 2.5" & 3" Wide Leaf Springs 2° Taper	6002	6102	6202	Q
All	Chevrolet/GMC Colorado/Canyon	6010	6110	6210	

Belltech Hanger Kits

Hanger Kits with Hardware			
Years	**Model**	**Drop**	**Part #**
Chevrolet Truck Applications			
99-06	Chevrolet/GMC Short Bed Only (used in kit # 6512)	2"	6513
01-03	Chevrolet/GMC 1500 (6-hole hanger)	2"	6504
02+	Chevrolet/GMC HD 2500 (8-hole hanger)	2"	6506
02+	Chevrolet/GMC HD 3500 (10-hole hanger) 2"-3"	2"	6510
88-98	Chevrolet/GMC 1/2 Ton Standard Cab (used in kit # 6500,6503,6505)	2"	6502
88-98	Chevrolet/GMC 1/2 Ton Extended Cab (used in kit # 6503)	2"	6501
88-98	Chevrolet/GMC 1/2 Ton (used in kit # 6900 & 6905)	2"	6902
75-91	Chevrolet/GMC 1 Ton (used in kit # 6750)	2"	6752
73-87	Chevrolet/GMC 1/2 Ton (used in kit # 6800)	3"	6802
92-94	Chevrolet/GMC Suburban (used in kit # 6620)	2"	6625

Belltech Hanger Kits (cont.)

Years	Model	Drop	Part #
Dodge Truck Applications			
97-04	Dodge Dakota & RT (Front hanger only, used in kit # 6574)	2"	6575
97-04	Dodge Dakota	4"	6574
87-96	Dodge Dakota Std. Cab	4"	6570
94-99	Dodge Ram 1500 Ext. Cab (Front hanger only, used in kit # 6580 & 6584)	2"	6582
94-99	Dodge Ram 1500 Std. Cab (Front hanger only, used in kit # 6580 & 6584)	2"	6583
94-99	Dodge Ram 3500 (used in kit # 6592)	2"	6588
Ford Truck Applications			
97-03	Ford F-150 Short Bed Only (used in kit #6419)	2"	6418
87-96	Ford F-150 Extended Cab (used in kit #6415 & 6417)	3"	6413
87-96	Ford F-150 Standard Cab (used in kit #6415 & 6417)	3"	6414
83-97	Ford Ranger, 94-97 Mazda B-2300 /3000 / 4000 - (Rear- kits 6410/6412)	2"	6408
83-97	Ford Ranger, 94-97 Mazda B-2300 / 3000 / 4000 (Front-kits 6410-6412)	2"	6407
83-97	Ford Ranger, 94-97 Mazda B-2300 /3000 / 4000 Std. Cabs	4"	6410
83-97	Ford Ranger, 94-97 Mazda B-2300 / 3000 / 4000 Ext. Cabs	4"	6412

Belltech Shackle & Hanger Kits

Rear Shackle & Hanger Kits

Year	Applications	DROP 3"	DROP 4"	DROP 5"	FOOTNOTES
Chevrolet / GMC Fullsize Truck Applications					
99-06	1/2 Ton Chev/GMC (Ext. cab short bed only)	6515	6514		AX
99-06	1/2 Ton Chev/GMC (Std. cab short bed only)	6511	6512		AX
04-06	1/2 Ton Chev/GMC Crew cab		6519		AU
01-03	GM HD 1500 (8 lug) w/ factory 6 hole hanger		6507		
01-03	GM HD 1500 (8 lug) w/ factory 6 hole hanger			6517	
88-98	1/2 Ton Chev/GMC (Ext. cab)		6503		
88-98	1/2 Ton Chev/GMC (Std. cab)		6500		
90-94	1/2 Ton Chev/GMC (SS 454 only)		6505		
73-87	1/2 Ton Chev/GMC		6800		
02+	GM HD 2500 (8 lug) w/ factory 8 hole hanger		6508		
02+	GM HD 2500 (8 lug) w/ factory 8 hole hanger			6518	
97-00	3/4 Ton Chev/GMC (Crew cab)		6909		E
97-00	3/4 Ton Chev/GMC (Std. & Ext. cab)		6907		E
90-96	3/4 Ton Chev/GMC (All cabs)		6905		E
88-98	3/4 Ton Chev/GMC (Six lug-All cabs)		6505		E,U
02+	GM HD 3500 (8 lug) w/ factory 10 hole hanger		6509		
02+	GM HD 3500 (8 lug) w/ factory 10 hole hanger			6520	
97-00	1-Ton Chev/GMC (Crew cab)		6909		E
97-00	1-Ton Chev/GMC (Std. & Ext. cabs)		6907		E
88-96	1-Ton Chev/GMC (All cabs)		6905		E
75-91	1-Ton Chev/GMC (Crew cab & Dually only)		6750		
Chevrolet / GMC SUV Applications					
95-99	Tahoe, Yukon (4 Door only)		6636		
Dodge Truck Applications					
94-99	Ram 1500 Std. Cab 8Cyl. (All except Long Bed)		6580		
94-99	Ram 1500 Ext. Cab 8Cyl. (All except Long Bed)		6584		
97-04	Dakota Std. Ext. & Quad Cabs		6574		
87-96	Dakota Std. Cab 8Cyl.		6570		
94-00	Ram 2500 V-10 & Diesel		6594		
94-00	Ram 3500 V-10 & Diesel		6592		
Ford Truck Applications					
97-03	F-150 Std. Ext. & Crew Cab		6419		
92-95	F-150 Lightning		6415		Z
87-96	F-150 Std. Cab		6415		
87-96	F-150 Ext. Cab		6417		
87-94	F-250/F-350 Std. Cab, Crew Cab		6420		
87-94	F-250/F-350 Ext. Cab Dually Only		6422		

Belltech Shackle Kits

Shackle Kits								
Year	Model	Drop					Lift	Footnotes
		1"	2"	2"-3"	3"	3"-4"	1/2"	
Chevrolet Truck								
07+	Chevrolet / GMC 1/2 Ton Pickup	6700	6400	6401			6404	BC
01-08	Chevrolet 1500, 2500 & 3500 Heavy Duty Pickup	6700	6400		6403		6404	BC
94-00	Chevrolet / GMC C2500, C3500 Pickup	6700	6400					
88-06	Chevrolet / GMC 1/2 Ton Pickup	6700	6400				6404	
88-00	Chevrolet / GMC C3500 1-Ton Pickup	6700	6400				6404	
88-98	Chevrolet / GMC C2500 3/4 Ton Pickup	6700	6400				6404	
73-06	Chevrolet 1/2, 3/4 & 1-Ton Pickup	6700					6404	
73-99	Chevrolet 1/2 & 3/4 Ton Suburban	6700					6404	
Dodge Truck								
02-05	Dodge Ram 1/2 Ton Pickup	6405						
94-01	Dodge Ram 1/2 Ton Pickup	6700	6400				6404	
94-00	Dodge Ram 2500 & 3500 Pickup		6590					
Ford Truck								
04-07	Ford F150 1/2 Ton Pickup	6425	6406					
04-07	Ford F150 1/2 Ton Pickup 4WD	6425	6406	6409				BC, BD
97-03	Ford F150 1/2 Ton Pickup	6700	6400					
87-03	Ford F150 1/2 Ton Pickup	6700					6404	
87-98	Ford F250, F350 Pickup		6425					

Belltech Flip Kits & C-Section Kits

						Content of Flip Kits										
Year	Model	Desired Drop	Flip Kit Part #	FOOT NOTES	C-Section Only	Saddles	U-Bolts	U-Bolt Plates	Crossmembers	Shock Extensions	Bump Stops	C-Sections	C-Section Template	Driveline Corrections	Leaf Spring Hangers	Hardware
Chevrolet Colorado																
04-07	Colorado / Canyon Std, Ext, & Quad Cabs 4 & 5 Cyl.				6603							X				X
Chevrolet S-Series																
82-03	Chevrolet/GMC S-10 C-Notch				6602							X				X
Chevrolet Fullsize Truck																
2007+	1/2 Ton Chev/GMC Ext & Quad Cab	5"-6"	6521			X	X	X			X			X	X	X
2007+	1/2 Ton Chev/GMC Std Cab	7"	6522			X	X	X			X					X
01-06	1/2 Ton Chev/GMC (Std. cab w/ 5.25" Frame)	6"	6616		6617	X	X	X		X	X	X	X			X
04-06	1/2 Ton Chev/GMC Crew Cab Only	4"-5"	6519			X	X	X		X	X			X	X	X
01-06	1/2 Ton Chev/GMC (Ext. cab w/ 5.25" Frame)	6"	6618		6617	X	X	X		X	X	X	X	X		X
99-00	1/2 Ton Chev/GMC (Std. cab w/ 5" Frame)	6"	6612		6613	X	X	X		X	X	X	X			X
99-00	1/2 Ton Chev/GMC (Ext. cab w/ 5" Frame)	6"	6614		6613	X	X	X		X	X	X	X	X		X
90-94	1/2 Ton Chev/GMC (SS454 only)	6"	6650		6611	X	X	X		X	X	X	X	X		X
90-00	3/4 Ton Chev/GMC (All cabs)	8"	6926	S,U	6911	X	X	X		X	X	X	X	X		X
88-00	1-Ton Chev/GMC (All cabs)	8"	6926	S,U	6911	X	X	X		X	X	X	X	X		X
88-98	3/4 Ton Chev/GMC (All cabs-Six lug)	6"	6650	U	6611	X	X	X		X	X	X	X	X		X
88-98	1/2 Ton Chev/GMC (Ext. cab) SUPER C-NOTCH				6608						X	X	X			X
88-98	1/2 Ton Chev/GMC (Ext. cab)	6"	6607	S	6611	X	X	X		X	X	X	X	X		X
88-98	1/2 Ton Chev/GMC (Std. cab)	6"	6605		6611	X	X	X		X	X	X	X			X
73-87	1/2 Ton Chev/GMC	6"	6850		6810	X	X	X			X	X	X			X
73-87	1/2 Ton Chev/GMC Blazer,Jimmy,Suburban	6"	6852	P		X	X	X			X					X
Chevrolet SUV																
95-99	1/2 Ton Suburban	7"	6634	S	6623	X	X	X		X	X	X	X	X	X	X
95-99	Tahoe, Yukon (2 Door only)	5.5"	6640	AE	6641	X	X	X		X	X	X	X	X	X	X
95-99	3/4 Ton Suburban (6 Lug)	7"	6930	S	6623	X	X	X		X	X	X	X	X	X	X
92-94	1/2 Ton Suburban	7"	6620	S	6623	X	X	X		X	X	X	X	X	X	X
92-94	3/4 Ton Suburban (6 Lug)	7"	6624	S	6623	X	X	X		X	X	X	X	X	X	X
73-91	Suburban	7"	6852	G,P		X	X	X			X					X
Chevrolet Van																
95-02	Astro/Safari w/ Factory Steel Leaf	3.5"	6302	L,AF	N/A	X	X	X			X					X

Belltech Flip Kits & C-Section Kits (cont.)

Year	Model	Desired Drop	Flip Kit Part #	FOOT NOTES	C-Section Only	Content of Flip Kits: Saddles	U-Bolts	U-Bolt Plates	Crossmembers	Shock Extensions	Bump Stops	C-Sections	C-Section Template	Driveline Corrections	Leaf Spring Hangers	Hardware
Chevrolet Van (cont.)																
85-95	Astro/Safari w/ Factory Composite Leaf	2.5"	6300	L,AF	N/A	X	X	X			X					X
Dodge Truck																
02-05	Ram Std. Cab (Including Hemi)	5"	6686		6687	X	X	X			X			X		X
02-05	Ram Quad Cab (Including Hemi)	5"	6686		6687	X	X	X			X			X		X
94-99	Ram 1500 Std. Cab 8Cyl. (Auto Trans Only)	6"	6680		6682	X	X	X	X	X	X	X	X	X		X
94-99	Ram 1500 Ext. Cab 8Cyl. (Auto Trans Only)	6"	6681		6683	X	X	X	X	X	X	X	X	X		X
Ford Truck																
04-07	F-150 Std. Ext. & Quad Cabs	5"	6440		6441	X	X	X		X	X			X		X
97-03	F-150 Std. Ext. Cab	6"	6690		6693	X	X	X		X	X	X	X	X		X
97-03	F-150 Crew Cab	6"	6691		6693	X	X	X		X	X	X	X	X		X
87-96	F-150 Std. Cab	6"	6430		6433	X	X	X		X	X	X	X	X		X
87-96	F-150 Ext. Cab	6"	6432		6433	X	X	X		X	X	X	X	X		X
89-97	Ranger Std. Cab	5.5"	6435		6438	X	X	X			X	X	X	X		X
89-97	Ranger Ext. Cab	5.5"	6437		6438	x	x	x			x	x	x	x		x
Import Truck																
94-97	Mazda B-Series Std. Cab	5.5"	6435		6438	X	X	X			X	X	X	X		X
94-97	Mazda B-Series Ext. Cab	5.5"	6437		6438	X	X	X			X	X	X	X		X
04+	Nissan Titan (includes lifting leaf springs)	4"	6450			x	x	x			x			x		x
07+	Toyota Tundra -V8 only	4"	6540			x	x	x			x			x		x

Belltech Accessories

Shock Extensions

Year	Model	Part #
Chevrolet Truck		
00-06	Chevrolet/GMC Tahoe/Suburban/Yukon/Yukon XL	6651
99-06	Chevrolet/GMC 1/2 Ton All Cabs (Used in kits 6612,6614)	6654
88-98	Chevrolet/GMC C-1500 1 Piece (used in kits 6605,6607,6650,6505,6905,6926)	6652
88-98	Chevrolet/GMC C-1500 Upper Shock Mount	6658
Ford Truck		
97-03	Ford F-150 Std. & Ext. Cabs	6656
97-03	Ford F-150 Quad Cab	6657

Transmission Crossmember

Year	Application	Part #
04+	Chevrolet/GMC Colorado / Canyon	6963
01-03	Chevrolet/GMC Heavy Duty 3500 (Allison transmission only)	6965
94-99	Dodge Ram (automatic transmission only)	6684

Universal Bumpstops

Description	Part #
Foam Bump Stop-Universal Cone 1.26" tall x 2.5" OD	4922
Foam Bump Stop-Universal Cone 2.01 tall x 2.5" OD	4923
Foam Bump Stop-Universal Cone 3.01" tall x 2.5" OD	4924
Direct replacement for Tahoe/Yukon, Suburban & XL (2 5/8H x 3 5/16W)	4925

Pinion Shims

Year	Application	Part #
All	1° Pinion Shim for Pickups with 2.5" & 3" Wide Leaf Springs	4973
All	2° Pinion Shim for Pickups with 2.5" & 3" Wide Leaf Springs	4975
All	3° Pinion Shim for Pickups with 2.5" & 3" Wide Leaf Springs	4976
All	4° Pinion Shim for Pickups with 2.5" & 3" Wide Leaf Springs	4977
All	6° Pinion Shim for Pickups with 2.5" & 3" Wide Leaf Springs	4979

Belltech Accessories (cont.)

Drive Line Alignment Kits		
Year	**Application**	**Part #**
Chevrolet/GMC		
99-06	Chevrolet/GMC C-1500 Extended Cab w/ 2 piece driveshaft (Center carrier bearing adjuster bracket)	4995
88-98	Chevrolet/GMC C-1500 / 2500 / 3500 Pickup w/ 2 piece driveshaft (angle correction kit w/ 4" drop)	4981
88-98	Chevrolet/GMC C-1500 / 2500 / 3500 Pickup w/ 2 piece driveshaft (angle correction kit w/ 6" drop)	4985
Dodge Truck Applications		
94-98	Dodge Ram 1500 Pickup w/ 2 piece driveshafts (angle correction kit w/ 4" drop)	4988
Ford Truck Applications		
87-96	Ford F-150 Extended Cab w/ 2 piece driveshaft (angle correction kit w/ 4"-7" drop)	4990

Airjack Compressor Kits & Accessories	
Description	**Part #**
Replacement Air Compressor only (Viair)	5090
Air line kit	5094
Air compressor kit w/ air tank	5095
Air compressor kit without air tank	5096

Front End Alignment Kits (Caster/Camber)		
Year	**Model**	**Part #**
Chevrolet/GMC		
99-08	Chevrolet/GMC C-1500 2WD/4WD Front Camber Bushings 2 degree (4)	4955
99-08	Chevrolet/GMC C-1500 2WD/4WD Front end alignment cam lock plate kit 1 degree (8)	4951
88-98	Chevrolet/GMC C-1500 / 2500 / 3500 Chevy / GMC Pickups (Front end alignment cam kit)	4950
Dodge		
02-05	Dodge Ram 1/2 Ton Pickup (Front end alignment cam kit)	4949
Ford		
97-03	Ford F-150, Expedition, Navigator (Front end alignment cam kit)	4952
98-03	Ford Ranger / Mazda, 95-00 Explorer / Mountaineer (Front end alignment cam kit)	4954
Honda		
05+	Honda Ridgeline-Rear Camber Kit (2)	4956

Belltech Airjack Suspensions

Airjack Suspensions							
Year	**Application**	**Desired Drop**					
Chevrolet S-Series Applications		**Stock**	**2"**	**4"**	**5"**	**6"**	**FOOTNOTES**
82-03	Pickup all cabs	5098	5098	5098	5098	5098	
Chevrolet Fullsize Truck Applications		**Stock**	**2"**	**4"**	**6"**	**8"**	**FOOTNOTES**
99-06	1/2 Ton Chev/GMC (All cabs without c-sections)	5004					
99-06	1/2 Ton Chev/GMC (All cabs with c-sections)				5008		
88-98	1/2 Ton & 3/4 Ton Chev/GMC (All cabs)	5001(CC,FF)	5002(CC,FF)	5003(CC,FF)	5001(CC,FF)		CC,FF
88-99	1-Ton Chev/GMC (8 Lug- All cabs)	5007	5005	5006		5007	
Chevrolet SUV Applications		**Stock**	**2"**	**3"**	**4"**	**7"**	**FOOTNOTES**
00-06	Tahoe, Yukon	5028 (GG)	5028 (GG)	5028 (GG)			GG
00-06	Suburban, Yukon XL	5028 (GG)	5028 (GG)	5028 (GG)			GG
00-06	Avalanche	5028 (GG)	5028 (GG)	5028 (GG)	5028 (GG)		GG
92-99	Suburban 1500	5009 (DD,FF)				5010 (DD,FF)	DD,FF
Ford SUV Applications		**Stock**	**2"**	**3"**			**FOOTNOTES**
97-02	Expedition/Navigator (W/ Factory rear air spring)	5028(GG)	5028(GG)	5028(GG)			GG
Dodge Truck Applications		**Stock**	**2"**	**4"**	**6"**	**7"**	**FOOTNOTES**
94-99	Ram 1500 Std. Cab 8Cyl.	5052	5048	5050	5052	5048	
94-99	Ram 1500 Ext. Cab 8Cyl.	5052	5048	5050	5052	5048	
94-00	Ram 3500 V-10 & Diesel	5054					
Universal Kits		**Stock**	**2"**	**4"**	**5"**	**6"**	**FOOTNOTES**
1/2 Ton Full Size Pickups w/ Rear Leaf Springs		5097	5097	5097	5097	5097	
Mid & Mini Pickups w/ Rear Leafs		5098	5098	5098	5098	5098	

Belltech Anti-Sway Bars

Anti Sway Bars							
Year	Application	Kit front/rear	Front	Size	Rear	Size	FOOTNOTES
Chevrolet Colorado Applications							
04-07	Colorado/Canyon (all Cabs)	9900	5421	1 1/4"	5521	1"	
Chevrolet S-Series Applications							
02-07	Trailblazer, Envoy, SSR		N/A		5530	1 1/8"	
82-03	Chevy / GMC S-Series	9901	5420	1 1/4"	5520	1"	
95-03	Blazer/Jimmy 2 Dr	9923	5420	1 1/4"	5523	1 1/8"	
95-03	Blazer/Jimmy 4 Dr	9922	5420	1 1/4"	5522	1 1/8"	
83-94	Blazer/Jimmy	9902	5420	1 1/4"	5524	1"	
91-93	Typhoon	9903	5424	1 3/8"	5525	1 1/4"	
91	Syclone	9925	5424	1 3/8"	5520	1"	
Chevrolet Fullsize Truck Applications							
2007	Silverado, Sierra		5407		N/A		
05-07	Silverado, Sierra (with factory front torsion bars)	9924	5406	1 1/4"	5502	1"	
03-06	Silverado 1500 SS (AWD)	9905	5406	1 1/4"	5502	1"	
99-06	1/2 Ton Chev/GMC (All cabs)	9904	5402	1 3/8"	5502	1"	
01-06	2500HD,3500HD Chev/GMC (All cabs)	9909	5410	1 3/8"	5510	1 1/8"	
01-04	GMC Sierra Denali (w/quadra-steer)		5406	1 1/4"	N/A		
88-98	1/2 Ton Chev/GMC (Std. & Ext. cabs) & 3/4 Ton (w/ 6 lug)	9906	5400	1 3/8"	5500	1"	AB
88-98	Chev/GMC 3/4 Ton (8lug), 1-Ton & SS454	9907	5400	1 3/8"	5504	1"	AB
73-87	1/2 Ton Chev/GMC C-10, Blazer, Jimmy	9908	5404	1 3/8"	5508	1"	AA
Chevrolet SUV Applications							
2007	Tahoe	9909	5407	1 3/8"	5506	1"	
00-06	Tahoe, Yukon, Suburban, YukonXL, Avalanche	9910	5406	1 1/4"	5506	1"	
95-99	4WD Tahoe, Yukon (4 Door) will not fit Denali	9926	5600	1 3/8"	5512	1 1/8"	V
95-99	4WD Tahoe, Yukon (2 Door) will not fit Denali	9912	5600	1 3/8"	5650	1"	V
94-99	2WD Tahoe, Yukon (4 Door)	9911	5400	1 3/8"	5512	1 1/8"	AB, V
92-99	Suburban 1500	9911	5400	1 3/8"	5512	1 1/8"	AB, V
73-91	Suburban 1/2 Ton	9908	5404	1 3/8"	5508	1 1/8"	AA
Chevrolet Van Applications							
85-02	Astro/Safari (2WD)	9913	5428	1 3/8"	5528	7/8"	
Chevrolet Car Applications							
80-87	El Camino, Sprint, Regal, GN	9914	5432	1 3/8"	5532	1"	
Dodge Truck Applications							
02-07	Ram 1500 Std. & Quad Cab (include. HEMI)		N/A		5555	1 1/4"	
94-99	Ram 1500 Std. & Ext Cabs 8Cyl.		5440	1 3/8"	5540	1"	
97-04	Dakota Std. Ext. & Quad Cabs	9915	5438	1 1/4"	5538	3/4"	
87-96	Dakota	9916	5436	1 1/8"	5536	15/16"	AC
79-94	D-50		5454	1"	5554	3/4"	
Ford Truck Applications							
04-07	F-150 Std. Ext. & Quad Cabs		N/A		5548	1"	
97-03	F-150 Std. & Ext. Cab	9919	5446	1 3/8"	5546	1"	
97-03	F-150 Crew Cab. Including Harley and Lightning	9920	5446	1 3/8"	5547	1"	
98-03	Ranger Std. & Ext. Cab	9917	5444	1 1/4"	5542	3/4"	
90-97	Ford Ranger	9927	5445	1 1/4"	5542	3/4"	
1989	Ford Ranger	9918	5442	1 1/4"	5542	3/4"	
Ford SUV Applications							
02-05	Ford Explorer	9927	5443	1 3/8"	5543	1"	
03-05	Ford Expedition		N/A		5550	1"	
97-02	Expedition, Navigator 2WD	9921	5449	1 3/8"	5549	1 1/4"	
Import Truck Applications							
96-03	Isuzu Hombre	9901	5420	1 1/4"	5520	1"	
93-00	Toyota T-100		5460	1 1/4"	5560	7/8"	
04-07	Nissan Titan	9919	5457	1 3/8"	5557	1"	
86-97	Nissan Pickup (7/86-97)		5456	1"	5556	3/4"	
79-96	Mitsubishi Pickup	9918	5454	1"	5554	3/4"	
84-94	Toyota Pickup	9921	5458	1"	5558	3/4"	
86-93	Mazda Pickup		5452	1"	5552	3/4"	

FOOTNOTES ALL APPLICATIONS	
(A)	Not designed for diesel applications.
(B)	Spindle will not work with stock Impala SS wheels.
(C)	88-91 must use Alignment Kit #4950.
(D)	Must use Pinion Shim Kit #4975.
(E)	For increased suspension travel use #6911 C-Section Frame Kit.
(F)	On years 81-87, If brake rotor measures 1" thick use Spindle #3200 if 1.25" use #3100.
(G)	Fits 3" (most common) axle housings only.
(H)	Spindle will not work with factory 1LE (Handling Package Option).
(I)	Spindle will not work with GT style factory wheels.
(J)	Dropped I-Beam construction.
(K)	88-89 rear axle saddle must be welded inplace.
(L)	All except "All Wheel Drive" models
(M)	Spindle will not work with 14" wheels.
(N)	Shock does not fit 82-86+.
(O)	Lightnings must change to a smaller tire size when using I-Beams.
(P)	Rear leaf springs require 2" re-arch for adequate clearance.
(Q)	For Extended Cab applications use Lowering Blocks #6202 (3"drop with 2°taper) or #6102 (2" block with 2° taper).
(R)	For use with automatic transmission only.
(S)	It is highly recommended to use an AirJack
(T)	Do not lower front of vehicle more than 3"
(U)	4" Ext. Cab must use #4981. 6" Ext. Cab must use #4985 driveline alignment kit.
(V)	Sway Bars only fit vehicles equipped with O.E. rear sway bar mounts.
(W)	C-1500 1/2 Ton Suburban use #6700 Shackle to obtain 4" drop.
(X)	95-98 Astro Vans may also use #5958 leaf spring for 3" drop.
(Y)	This part is a leaf spring
(Z)	Must use #6431 C-Section Frame Rail Kit w/Hanger kit.
(AA)	For trucks w/o O.E. front sway bar w/Hanger kit.
(AB)	For trucks w/o O.E. front sway bar order adapter kit #5700.
(AC)	For trucks w/o O.E. front sway bar order adapter kit #5708.
(AD)	For trucks w/o O.E. rear sway bar order adapter kit #5712.
(AE)	Tahoe flip kits require an experienced installer. Please call for information before you attempt installation.
(AF)	When using a flip kit on a sway bar equipped Astro Van it is necessary to change the swaybar to Belltech #5528.
(AG)	Use flip kit #6612 for 99-00 trucks with 5" frame height measured at the rear bump stop.
(AH)	Use flip kit # 6614 for 99-00 trucks with 5" frame height measured at the rear bump stop.
(AI)	Use of leaf springs may affect towing capacity.
(AJ)	Use #4952 for front end alignments.
(AK)	Min. wheel size 16".
(AL)	Use #4954 for front end alignments.
(AM)	Street Performance shock absorbers recommended.
(AN)	When lowering the rear of an S10/S15 4"-6" you must check that the yoke is properly positioned in the transmission. The rear transmission seal must be in the original position on the yoke.
(AO)	Will not fit vehicle with 5.4L engine.
(AP)	Trucks featuring lowered O.E.M. Sport Suspensions may not achieve the specified drop.
(AQ)	Springs are designed to be used with Belltech shocks only.
(AR)	Springs are designed to be used with Premium Ride Suspension only.
(AT)	Min. wheel size 17".
(AU)	Adjustable rear spring hanger.
(AV)	Minimum wheel size 18".
(AW)	Replacement lowering balljoint
(AX)	We recommend using a C-Section kit for additional travel
(AZ)	Rear shocks only
(BA)	3"-4" front drop and 5" rear drop for 2WD only
(BB)	Minimum Wheel size 20"
(BC)	Remove stock block for additional lowering
(BD)	Ubolt kit #6206 is required when removing factory block for
(BE)	Just for vehicles without factory air suspensions
(BF)	Rear upper adjustable control arm #4956 is required if rear lowered more than 1.5"
(BG)	Kit contains components to lower rear factory Air-ride
(BH)	Rear upper adjustable Control arm required, if lowered more than
(BI)	Rebound adjustable only
(BK)	Front upper control arm required if lowered more than 1.25"
(BL)	Adjust rear factory air ride for drop
(BM)	Lowering strut only fits 2004-06 Colorado / Canyon- strut for 2007+ models is TBA
(CC)	Maximum rear wheel back spacing: 5.5"
(DD)	Maximum rear wheel back spacing: 4.5"
(FF)	Fits all except 8 lug single wheel bolt pattern
(GG)	Kit only contains two air assist springs
(YY)	All rear lowering components can be combined
N/A	Not applicable
TBA	To be announced

Update Your Old Part Numbers Online

Cross Reference Data sheet available for download at www.belltech.com

If you currently have old Belltech part numbers for complete kits and shocks and would like to know the New Replacement part numbers we have developed a “Cross Reference” data sheet on our website for download.

WWW.BELLTECH.COM

COMPLETE KITS

COMPONENTS BY MAKE

SHOCKS

COMPONENTS

1075 North Avenue · Sanger, California 93657
P: 559.875.0222 ·F: 559.876.2259

belltech.com

Full Product / Applicaton Listing

Part # 13035