DERALE PERFORMANCE

The Leader in Performance Cooling

2010-2011

DERALE PERFORMANCE

The Leader in Performance Cooling

Welcome to the Derale Performance 2010-2011 Product Catalog.

Derale Performance is a division of CP Auto Products, Inc., a third generation family-owned business that has been a California corporation since 1946 and charter member of the original Speed Equipment Manufacturers Association, also known simply as SEMA, established in 1963.

The basic principals that our founder Sam Longo established and practiced throughout his notable career are the very principles that drive Derale Performance today. Our passion to build the highest quality products is evident throughout the next 63 pages - where you will find the most complete performance cooling line in the industry. We manufacture many products in-house; and source as many raw materials and components through US-based companies as possible. "Made in USA" is our promise to support quality and help return America to the forefront of manufacturing technology.

Thank you for choosing Derale Performance.

2009 SEMA SHOW LAS VEGAS, NEVADA U.S.A.
1951 HENRY J - A-GAS DRAGSTER

DERALE PERFORMANCE

The Leader in Performance Cooling

NEW PRODUCTS NOW AVAILABLE!!!

H.O. EXTREME ELECTRIC FAN SERIES

AVAILABLE IN MULTIPLE SIZES & STYLES

Part # 16114

SEE PAGES 8-9

- Powerful 300-Watt Waterproof/ Dustproof Motor (IP68 Certified)
- Maximum Performance at Higher Static Pressure Loads
- Extremely Reliable - Lasts up to 3X Longer!!

HIGH AMPERAGE DUAL ELECTRIC FAN CONTROLLERS

OPERATES TWO HIGH AMPERAGE ELECTRIC FANS WITH ONLY ONE PROBE!

Part # 16788/ 16789

SEE PAGE 14

- Controls High Amp Dual Fan Setup or Single 2-Speed Fan with a Single Probe
- Rated at 35 Amps Per Fan
- Finned Aluminum Housing

MADE IN U.S.A.

FORD E4OD, 4R100, 5R110 & 5R110W TRANSMISSION COOLING PAN

FITS MOST APPLICATIONS 1989-2010

Part # 14208

SEE PAGES 40-41

- New Part #14208 now fits Ford 5-speed 5R110 & 5R110W as well as previous 4-Speed 4R100 & E4OD
- All New Tooling
- Reduces Fluid Temperatures
- Increases Fluid Capacity
- Two-Stage Heat-Dissipating Black Finish
- Added Drain Plug & 1/8" NPT Temperature Sending Port

MADE IN U.S.A.

HYPER-COOL EXTREME REMOTE MOUNT FLUID COOLERS

Part # 15870

SEE PAGE 20

BAJA 1000 TESTED & PROVEN

- New Hyper-Cool Extreme
- Severe-Duty Use
- Powerful 150-Watt Waterproof/Dustproof Motor (IP-68 Certified)
- Our Most Efficient Remote Cooler

MORE NEW PRODUCTS!!!

Compact Fluid Coolers .....Page 39
Cooler Installation Kits .....Page 55
Dual Circuit Remote Mount Coolers .....Page 24
Dual Circuit Fluid Coolers .....Page 27
Engine Oil Filter Adapters .....Page 48
Fittings & Accessories .....Page 53
High Output RAD Fans .....Pages 3-5
Single Fan Controllers .....Page 14
Stacked Plate Coolers .....Pages 28-30

DERALE PERFORMANCE

The Leader in Performance Cooling

TABLE OF CONTENTS

BELT DRIVEN FAN SPACERS
Belt Driven Fan Spacers 57

BELT DRIVEN FANS
Fan Clutch Fans 60
Heavy Duty Flex Fans 58
High Performance Aluminum Flex Fans 59-60
High Performance Stainless Flex Fans 59
Rigid Race Fans 61

COMPACT COOLERS & FUEL FILTRATION
Fuel Filter / Water Separator Kits 39
-6AN Compact Fluid Coolers 39

COOLER INSTALLATION KITS
Cooler Installation Kits 55

DIRECT FIT JEEP KITS
Automatic Transmission Cooler Kit 19
Performance Electric Fan Kit 18

DUAL CIRCUIT FLUID COOLERS
Dual Circuit Tube & Fin Coolers 27

ELECTRIC FANS
High Output Single RAD Fans 3
High Output Single RAD Fan/Aluminum Shroud Kits 4
High Output Dual RAD Fan/Aluminum Shroud Kits 5
High Output RAD Fan/Steel Shroud Kits 6
High Output RAD Fan/Molded Shroud Kits 7
H.O. Extreme - Curved Blade Fans 8
H.O. Extreme - Curved & Paddle Blade Fans 9
Tornado Curved Blade Fans 10
Dual Tornado Fans with Brackets 11
Tornado Fan Mounting Brackets 11
Dyno-Cool Curved Blade Fans 12
Dyno-Cool Straight Blade Fans 13

ELECTRIC FAN ACCESSORIES
Installation Kits 17
Mounting Brackets 17
Relay Wire Harness Kits 17

ELECTRIC FAN CONTROLLERS
High Amperage Adjustable Fan Controllers 14
Adjustable Fan Controllers 15
Mechanical Fan Controller 15
Single Stage Fan Controllers 16
Thread-In Fan Switches 16

ENGINE ADAPTER QUICK REFERENCE GUIDE
Engine Adapter Reference Guide 43

ENGINE OIL COOLER KITS
Sandwich Adapter Kits 44
Spin-On Adapter Kits 46

ENGINE OIL FILTER ADAPTERS
GM V8 Bolt-On Oil Filter Adapter 48
GM V8 Canister-to Spin-On Oil Filter Adapter 48

ENGINE OIL FILTER RELOCATION KITS
Dual Filter Mount 49
Single Filter Mount 49

ENGINE SANDWICH ADAPTERS
Engine Sandwich Adapters 45

ENGINE SPIN-ON ADAPTERS
Engine Spin-On Adapters 47

FAN CLUTCHES
Fan Clutches 62

FITTINGS & ACCESSORIES
Fittings & Accessories 53

FITTINGS, OIL HOSE & ACCESSORIES
Fittings, Oil Hose & Accessories 54

FLUID CONTROL THERMOSTATS
Fluid Control Thermostat Kits and Accessories 52

FRAME RAIL COOLERS
Fluid Coolers 36
Transmission Cooler Kits 36

HEAT SINK COOLERS
Fluid Coolers 37
Transmission Cooler Kits 37

PART NUMBER INDEX
Part No. 12006-16735 63
Part No. 16736-98452 64

POWER STEERING COOLER KITS
Dyno-Cool Aluminum Tube & Fin Cooler Kits 38
Tube & Fin Cooler Kits 38

RADIATOR COOLING LINE FITTINGS
Radiator Adapter Fittings 56
Universal Transmission Line Fittings 56

REMOTE COOLER ACCESSORIES
In-line Fluid Thermostats 26
Remote Cooler Mounting Kits 26

REMOTE MOUNT FLUID COOLERS
Hyper-Cool Extreme 20
Hyper-Cool 21
Atomic-Cool 22
Electra-Cool 23
Electra-Cool Dual-Circuit 24
Econo-Cool Dual Circuit 24
Econo-Cool 25
Dyno-Cool Remote Coolers 25

REMOTE FILTER MOUNTS
Premium Series 51
Standard Series 50

STACKED PLATE COOLERS
Aluminum Cooler Fittings 28
Stacked Plate Coolers 28
Stacked Plate Cooler Mounting Brackets 28
Stacked Plate Cooler Kits 29

TRANSMISSION COOLERS
Series 10000 Stacked Plate Trans Cooler Kits 30
Series 9000 Plate & Fin Trans Cooler Kits 31
Series 8000 Plate & Fin Trans Cooler Kits 32
Series 7000 Tube & Fin Trans Cooler Kits 33
Series 7000 AN Tube & Fin Trans Cooler Kits 34
Series 6000 Tube & Fin Trans Cooler Kits 35

TRANSMISSION COOLING PANS
Transmission Cooling Pans 40-41
Transmission Cooling Pan Accessories 41

TRANSMISSION FILTER KITS
Transmission Filter Kits 42

High Output Single RAD Fans

- Mounts as a Pusher or Puller without flipping blade or switching motor leads
- State-of-the-art symmetrical design
- High Output 265-watt 2-speed motor
- Ultra-quiet patented skewed blade design
- Premium - Patented ratchet mounting system
- Standard - Push-through plastic rod mount system

MADE IN U.S.A.

INCREASED FUEL ECONOMY

REVERSIBLE

INCREASES HORSEPOWER & TORQUE

WIRING RECOMMENDATIONS:

For two speed operation fans require two separate turn-on sources

See Pages 14, 15 & 16 for thermostat options

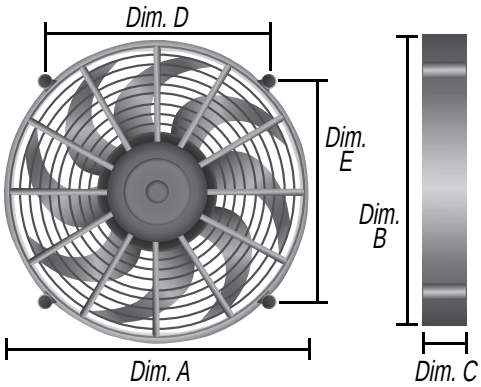

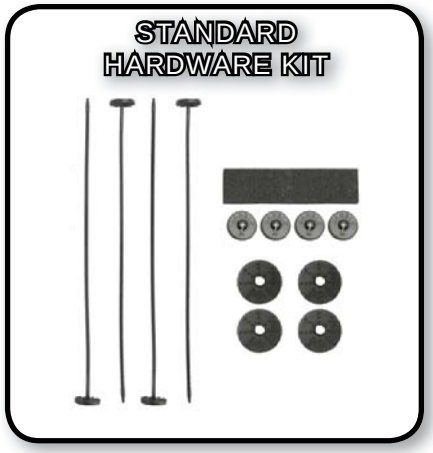

Premium Part No.	Standard Part No.	Fan Size	CFM* High / Low	Amp Draw High / Low	Dim. A (Width)	Dim. B (Height)	Dim. C (Depth)	Dim. D (Mounting)	Dim. E (Mounting)
16212	**18212**	12”	1450 / 1000	21 / 15	12 3/4”	12 3/4”	2 5/8”	8 1/4”	11 5/8”
16214	**18214**	14”	2100 / 1500	22 / 16.2	14 1/2”	14 1/2”	2 5/8”	8 3/4”	13 1/4”
16217	**18217**	17”	2400 / 1800	23.5 / 17.4	16 7/8”	16 7/8”	2 5/8”	8 7/8”	15 5/8”
16200	Dual Mount Bracket Kit (Details shown on Page 17)								

** CFM tested at zero static pressure.*

High Output Single RAD Fan - Aluminum Shroud Kits

- Powerful, primary cooling fan eliminates fuel & horsepower-robbing belt driven fans
- High Output 265-watt 2-speed motor
- Designed for maximum performance at high static-pressure loads for more effective cooling
- Ultra-quiet patented skewed-blade design
- Multiple mounting options
- Puller (engine side) applications only
- Aircraft-quality natural satin aluminum finish can be polished, painted or anodized
- 4 sizes available
- All include mounting kit with illustrated installation instructions

NEW

MADE IN U.S.A.

INCREASED FUEL ECONOMY

INCREASES HORSEPOWER & TORQUE

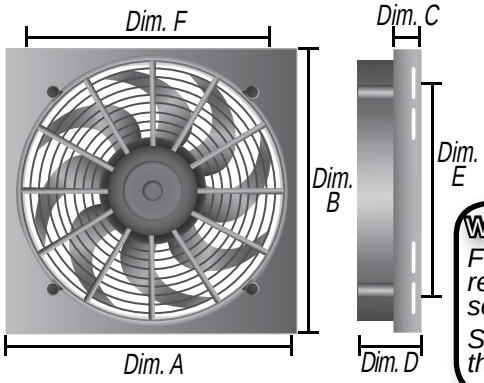

WIRING RECOMMENDATIONS:

For two speed operation fans require two separate turn-on sources

See Pages 14, 15 & 16 for thermostat options

HARDWARE KIT

Part No.	CFM* High / Low	Amp Draw High / Low	Dim. A (Width)	Dim. B (Height)	Dim. C (Depth)	Dim. D (Overall Depth)	Dim. E (Mounting)	Dim. F (Mounting)
16816	2400 / 1800	23.5 / 17.4	16 3/4”	17 5/8”	1 1/8”	3”	8 1/8” - 15 5/8”	7 1/4” - 14 3/4”
16819	2400 / 1800	23.5 / 17.4	18 3/4”	17 5/8”	1 1/8”	3”	8 1/8” - 15 5/8”	9 1/4” - 16 3/4”
16821	2400 / 1800	23.5 / 17.4	20 3/4”	17 5/8”	1 1/8”	3”	8 1/8” - 15 5/8”	11 1/4” - 18 3/4”
16822	2400 / 1800	23.5 / 17.4	22 1/4”	17 5/8”	1 1/8”	3”	8 1/8” - 15 5/8”	12 3/4” - 20 1/4”

** CFM tested at zero static pressure.*

High Output Dual RAD Fan - Aluminum Shroud Kits

- Powerful, primary cooling fan eliminates fuel & horsepower-robbing belt driven fans
- High Output 265-watt motors
- Designed for maximum performance at high static-pressure loads for more effective cooling
- Ultra-quiet patented skewed-blade design
- Air pressure-relief vents included (Part No. 16826)
- Multiple mounting options
- Puller (engine side) applications only
- Aircraft-quality natural satin aluminum finish can be polished, painted or anodized
- 2 sizes available
- All include mounting kit with illustrated installation instructions

NEW

WIRING RECOMMENDATIONS:

Dual Fans require two separate turn-on sources
See Pages 14, 15 & 16 for alternative thermostat options

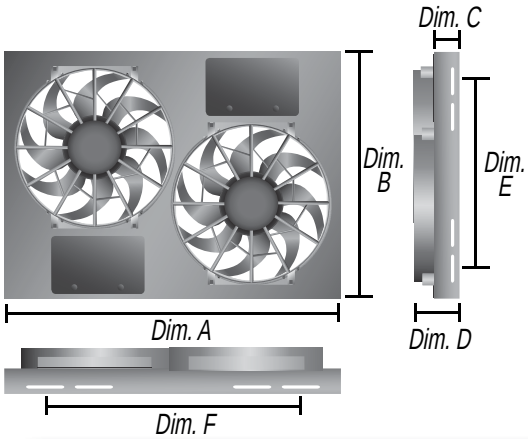

MADE IN U.S.A.

INCREASED FUEL ECONOMY

INCREASES HORSEPOWER & TORQUE

HARDWARE KIT

Part No.	CFM*	Amp Draw (Fan 1 / 2)	Dim. A (Width)	Dim. B (Height)	Dim. C (Depth)	Dim. D (Overall Depth)	Dim. E (Mounting)	Dim. F (Mounting)
16825	4000	24.8 / 24.8	25 5/8”	15 1/8”	2”	3 1/2”	6” - 13 1/2”	15 5/8” - 22 5/8”
16826	4000	24.8 / 24.8	25 5/8”	17 1/8”	2”	3 1/2”	8 1/8” - 15 5/8”	15 5/8” - 22 5/8”

** CFM tested at zero static pressure.*

High Output Dual RAD Fan - Steel Shroud Kit

- Powerful primary cooling fans
- High Output 265-watt motors
- Designed for maximum performance at high static-pressure loads for more effective cooling
- Ultra-quiet patented skewed-blade designs
- Fan housings include stator-flow directors
- Puller (engine side) applications only
- Powdercoated steel shroud with pressure relief vents
- Mounting kit includes illustrated installation instructions

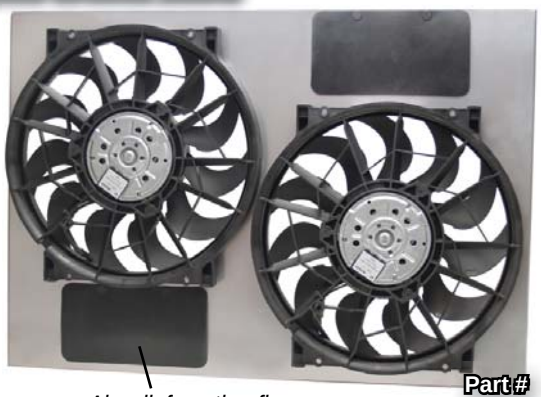

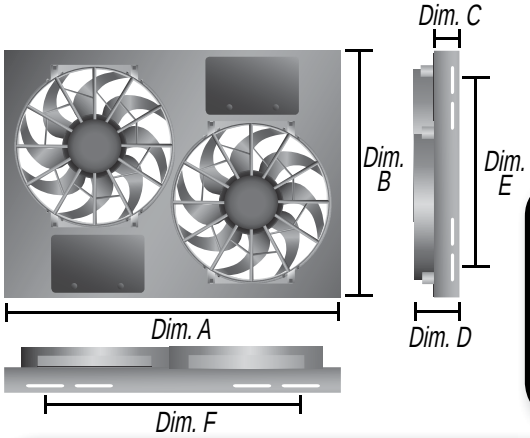

MADE IN U.S.A. · INCREASED FUEL ECONOMY · INCREASES HORSEPOWER & TORQUE

WIRING RECOMMENDATIONS:

Includes mounting kit with two high amperage relay harnesses

Dual Fans require two separate turn-on sources

See Pages 14, 15 & 16 for alternative thermostat options

Part No.	CFM*	Amp Draw (Fan 1 / 2)	Dim. A (Width)	Dim. B (Height)	Dim. C (Depth)	Dim. D (Overall Depth)	Dim. E (Mounting)	Dim. F (Mounting)
16927	4000	24.8 / 24.8	26”	18”	2”	3 3/4”	13 1/4”	21 1/4”

High Output Single RAD Fan - Steel Shroud Kit

- Powerful primary cooling fan
- High-Output 265-watt 2-speed motor
- Maximum performance at high static-pressure loads for more effective cooling
- Ultra-quiet patented skewed-blade design
- Puller applications only
- Powdercoated steel shroud

MADE IN U.S.A. · INCREASED FUEL ECONOMY · INCREASES HORSEPOWER & TORQUE

WIRING RECOMMENDATIONS:

For two speed operation fans require two separate turn-on sources

See Pages 14, 15 & 16 for thermostat options

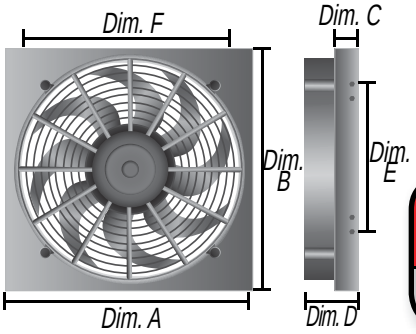

Part No.	CFM* High / Low	Amp Draw High / Low	Dim. A (Width)	Dim. B (Height)	Dim. C (Depth)	Dim. D (Overall Depth)	Dim. E (Mounting)	Dim. F (Mounting)
16919	2400 / 1800	23.5 / 17.4	19 1/2”	18”	1 5/8”	3 5/8”	8 7/8”	15 3/4”

** CFM tested at zero static pressure.*

High Output RAD Fans - Molded Shroud Kits

- Powerful primary cooling fan(s)
- High Output 265-watt motor(s)
- Designed for maximum performance at high static-pressure loads for more effective cooling
- Ultra-quiet patented skewed-blade design
- Fan housing includes stator-flow directors
- Air pressure relief vents included (#16926 & 16934)
- Puller applications only *except #16925
- Mounting kit includes illustrated installation instructions

MADE IN U.S.A. · INCREASED FUEL ECONOMY · INCREASES HORSEPOWER & TORQUE

Part # 16934

Part # 16925**

Part # 16926

WIRING RECOMMENDATIONS:

Includes mounting kit with high amperage relay harnesses
Dual Fans require two separate turn-on sources
See Pages 14, 15 & 16 for alternative thermostat options

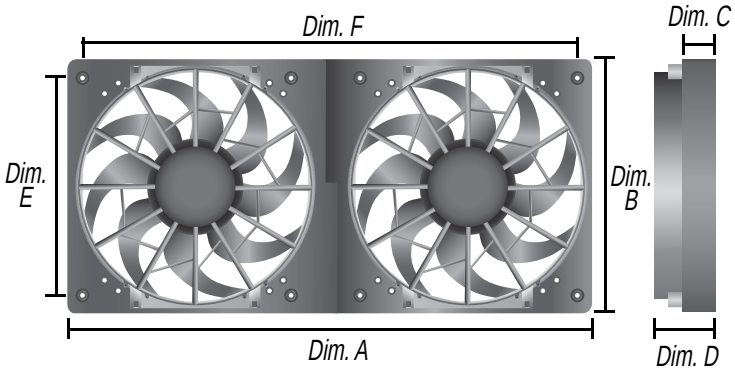

SINGLE FAN HARDWARE KIT

DUAL FAN HARDWARE KIT

Part No.	CFM*	Amp Draw (Fan 1 / 2)	Dim. A (Width)	Dim. B (Height)	Dim. C (Depth)	Dim. D (Overall Depth)	Dim. E (Mounting)	Dim. F (Mounting)
Single Fan Assemblies								
16925**	2150	23.4	12 1/4”	12 5/8”	1 1/2”	3 1/8”	10 5/8”	7 7/8”
16926	2200	23.4	15 3/4”	15 3/4”	1 7/8”	3 1/4”	12 7/8”	12 7/8”
Dual Fan Assemblies								
16812	1360	4.8 / 4.8	24 3/4”	11 1/2”	1 1/4”	3”	10”	22 1/2”
16928	4000	24.8 / 24.8	28 5/8”	13 7/8”	1 1/2”	3 1/4”	11 3/8”	25 5/8”
16934	4000	24.8 / 24.8	31 3/8”	15 3/4”	1 3/8”	3 1/4”	12 7/8”	28 7/8”

** *Pusher applications only.*

* *CFM tested at zero static pressure.*

H.O. Extreme - Curved Blade Fans

- High performance primary cooling fans eliminate fuel & horsepower-robbing belt driven fans
- Powerful, high-watt, high-torque motors last up to 3 times longer!
- Designed for maximum performance at high static-pressure loads for more effective cooling
- Sealed waterproof/dustproof (IP68 Certified) designs are perfect for off-road & all-season environments
- Thin, balanced curved-blades are quieter & allow lower profiles for limited-space requirements
- Puller (engine side) applications
- All include mounting kit with illustrated installation instructions
- Ultra-low profile designs (Part No.'s 16110 & 16112)
- 4 sizes available

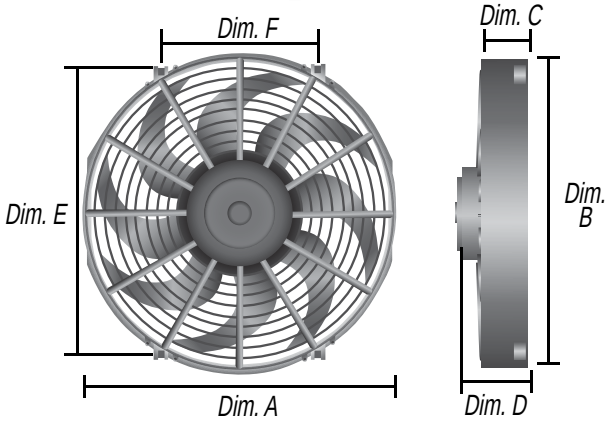

WIRING RECOMMENDATIONS:

See Pages 14, 15 & 16 for thermostat options

HARDWARE KIT

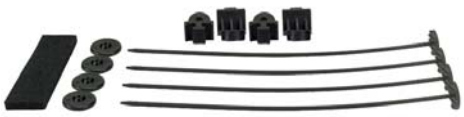

Part No.	Fan Size	CFM*	Amp Draw	Dim. A (Width)	Dim. B (Height)	Dim. C (Depth)	Dim. D (Overall Depth)	Dim. E (Mounting)	Dim. F (Mounting)
16110	10"	802	9.2	10 9/16"	11 1/8"	1 1/8"	2 1/16"	9 11/16"	5 13/16"
16112	12"	1328	14.2	12 9/16"	13 3/16"	1 1/8"	2 7/16"	11 7/16"	6 5/8"
16114	14"	1864	21.5	14 7/16"	15 1/6"	1 1/8"	3 7/16"	13 1/16"	7 9/16"
16116	16"	2024	21.0	15 11/16"	16 1/4"	1 1/8"	3 7/16"	14 1/16"	8 1/8"

** CFM tested at zero static pressure.*

H.O. Extreme - Curved & Paddle Blade Fans

- High performance primary cooling fans (Part No's 16918, 16142 & 16136) eliminate fuel & horsepower-robbing belt driven fans
- Powerful, high-watt, high-torque motors last up to 3 times longer!
- Designed for maximum performance at high static-pressure loads for more effective cooling
- Sealed waterproof/dustproof (IP68 Certified) designs are perfect for off-road & all-season environments
- Paddle blades pull large volumes of air for maximum heat-extraction capabilities in a more compact package
- Puller (engine side) applications
- Includes mounting kit with illustrated installation instructions
- 5 sizes available for wide range of automotive, racing, off-road & industrial applications

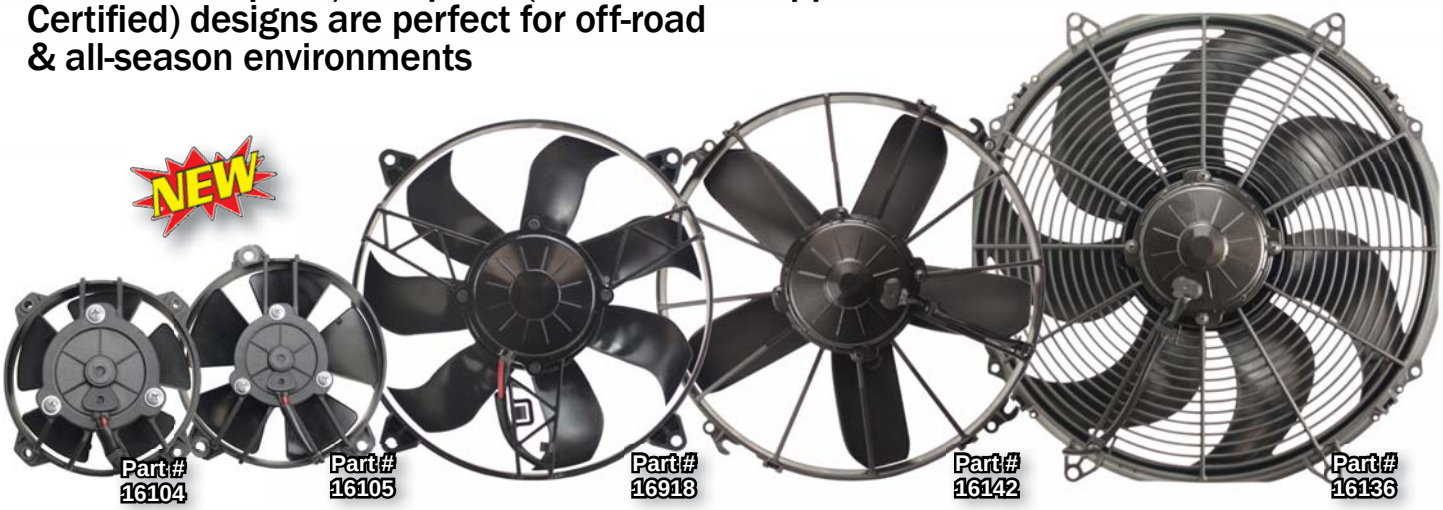

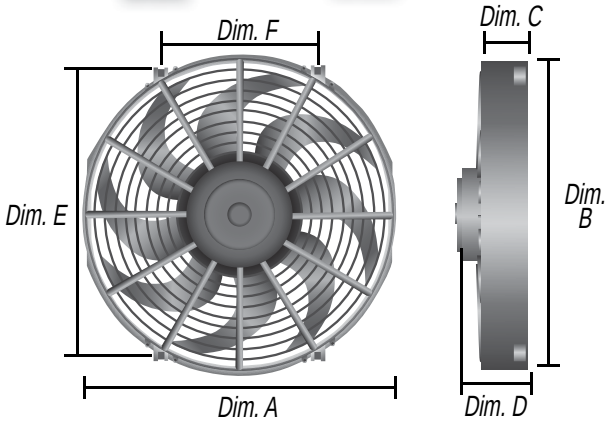

WIRING RECOMMENDATIONS:

See Pages 14, 15 & 16 for thermostat options

HARDWARE KIT

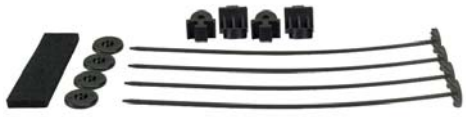

Part No.	Fan Size	CFM*	Amp Draw	Dim. A (Width)	Dim. B (Height)	Dim. C (Depth)	Dim. D (Overall Depth)	Dim. E (Mounting)	Dim. F (Mounting)
16104	4"	125	1.9	4 1/4"	4 1/4"	1 1/4"	2 3/8"	3 1/4"	3 1/4"
16105	5"	315	3.6	5 5/8"	6 1/4"	1 1/4"	2 1/4"	4 1/4" - 3 hole mount	
16918	12"	1350	16.0	12"	12"	1 5/8"	3 1/2"	10 5/8"	7 7/8"
16142	13"	1640	21.8	13 1/16"	13 1/16"	2 1/4"	3 3/4"	9 5/16"	9 5/16"
16136	16"	1918	25.4	15 11/16"	15 11/16"	2 1/16"	3 3/4"	14 1/16"	8 1/8"

** CFM tested at zero static pressure.*

Tornado - Curved Blade Fans

- Reliable, efficient high-torque motors
- 16” & 14” sizes designed as primary cooling fans that eliminate fuel & horsepower-robbing belt driven fans
- Reversible for pusher or puller options
- Patented, ultra-quiet balanced curved-blade design
- Premium part no. includes mounting kit, lighted toggle switch & wiring
- Standard part no. includes mounting kit
- 7 sizes available

MADE IN U.S.A.

INCREASED FUEL ECONOMY

REVERSIBLE

NEW

WIRING RECOMMENDATIONS:

See Pages 14, 15 & 16 for thermostat options

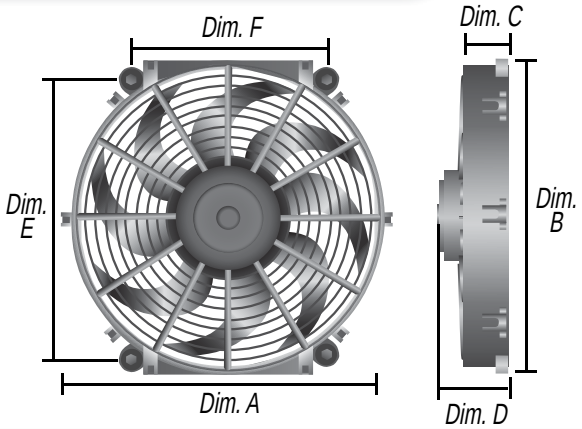

PREMIUM HARDWARE KIT

STANDARD HARDWARE KIT

Premium Part No.	Standard Part No.	Fan Size	CFM*	Amp Draw	Dim. A (Width)	Dim. B (Height)	Dim. C (Depth)	Dim. D (Overall Depth)	Dim. E (Mounting)	Dim. F (Mounting)
16507	16617	7”	400	4.8	7 1/4”	7 1/8”	1 3/8”	2 3/8”	5 3/8”	5 3/8”
16508	16618	8”	500	4.8	8 1/4”	8”	1 3/8”	2 3/8”	6”	6”
16509	16619	9”	570	5.4	9 5/8”	9 1/2”	1 1/4”	2 1/2”	8 7/8”	5”
16510	16620	10”	650	5.3	11 1/4”	10 5/8”	1 1/2”	2 1/2”	9 5/8”	6 7/8”
16512	16622	12”	880	8.8	12 1/2”	11 1/2”	1 1/2”	2 1/2”	11 1/8”	5 7/8”
16514	16624	14”	1350	10.5	14 1/2”	14”	1 3/4”	3 1/4”	12 1/4”	9”
16516	16626	16”	2175	18.4	16 3/4”	15 3/4”	1 3/4”	4 1/8”	13 3/4”	9 3/4”

** CFM tested at zero static pressure.*

Dual Tornado Fans with Brackets

- Available with dual 12” or 14” Tornado Fans
- Sturdy metal bracket system
- Black powdercoated finish
- Can be used for pusher or puller applications

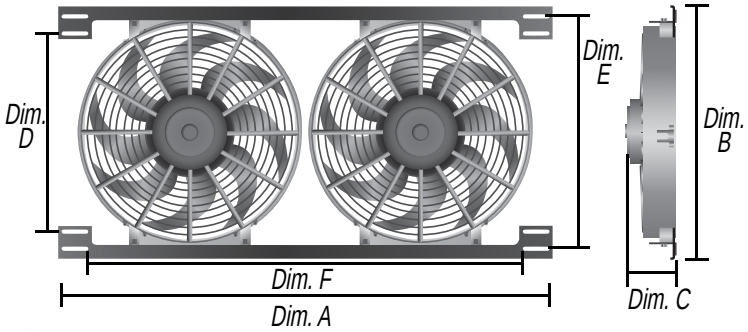

MADE IN U.S.A. · INCREASED FUEL ECONOMY · REVERSIBLE · INCREASES HORSEPOWER & TORQUE

WIRING RECOMMENDATIONS:
See Pages 14, 15 & 16 for thermostat options

Part No.	Fan Size	CFM*	Amp Draw (Fan 1 / 2)	Dim. A (Width)	Dim. B (Height)	Dim. C (Overall Depth)	Dim. D (Mounting)	Dim. E (Mounting)	Dim. F (Mounting)
16824	Dual 12”	1760	8.8 / 8.8	27 3/4”	14”	2 1/2”	10 1/8”	13 5/8”	23 1/2”
16834	Dual 14”	2700	10.5 / 10.5	31 3/4”	15 5/8”	3 1/4”	12 1/8”	14 5/8”	27 1/2”

** CFM tested at zero static pressure.*

Tornado Fan Mounting Brackets

- Fits 10”, 12”, 14” & 16” Tornado Fans
- Adjustable universal mounting
- 16700: Clear anodized aluminum finish
- 16701: Black powdercoated finish

SINGLE FAN MOUNTING BRACKETS

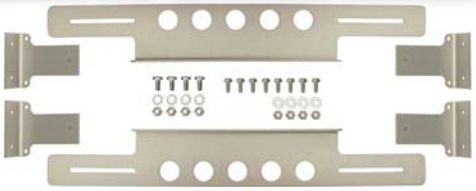

Part No.	Description
16700	Single Fan Mounting Brackets

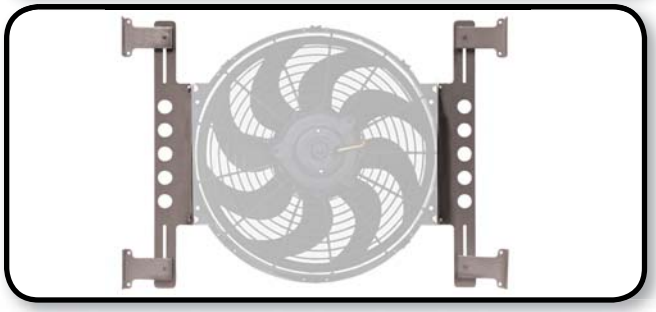

DUAL FAN MOUNTING BRACKETS

Part No.	Description
16701	Dual Fan Mounting Brackets

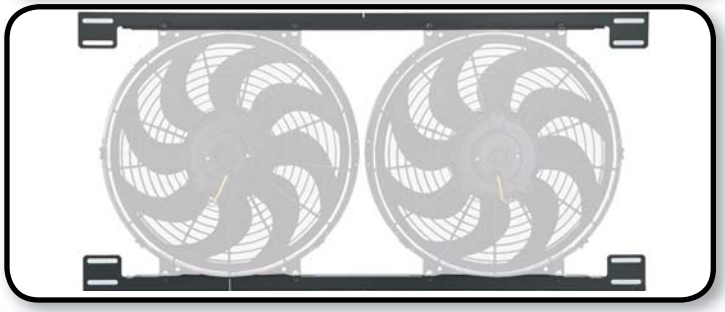

Dyno Cool - Curved Blade Fans

- Quiet and efficient balanced curved blades
- Powerful high-watt motors
- Fully reversible for pusher or puller applications
- Mounting hardware and illustrated installation instructions included
- 4 sizes available

WIRING RECOMMENDATIONS:

See Pages 14, 15 & 16 for thermostat options

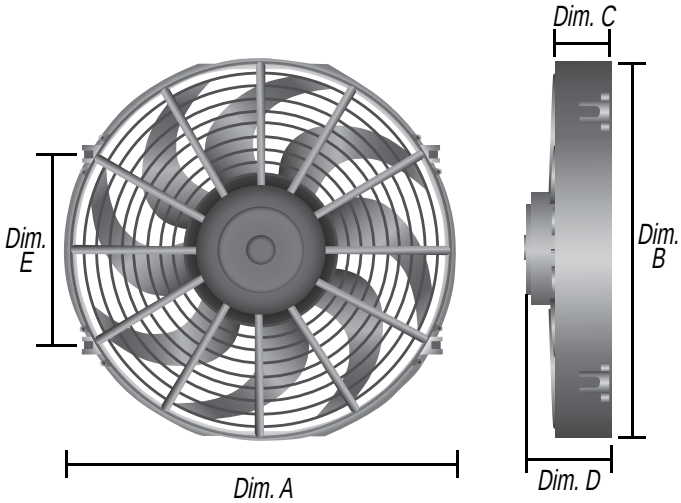

HARDWARE KIT

Part No.	Fan Size	CFM*	Amp Draw	Dim. A (Width)	Dim. B (Height)	Dim. C (Depth)	Dim. D (Overall Depth)	Dim. E (Mounting)
18910	10”	590	5.3	11 1/2”	10 3/4”	1 1/2”	2 3/8”	8 7/8”
18912	12”	810	8.3	13”	12 1/8”	1 1/2”	2 3/8”	6 3/16”
18914	14”	1230	9.7	14 7/8”	14”	1 1/2”	3 1/8”	7 1/8”
18916	16”	1980	17.3	16 1/2”	15 5/8”	1 1/8”	3 5/8”	14”

** CFM tested at zero static pressure.*

Dyno Cool - Straight Blade Fans

- Low-profile designs
- Powerful high-watt motors
- Two hardware kit options available; thermostatically-controlled (Premium) or mounting kit only (Standard)
- Fully reversible for pusher or puller applications
- Mounting hardware and illustrated installation instructions included
- 6 sizes available

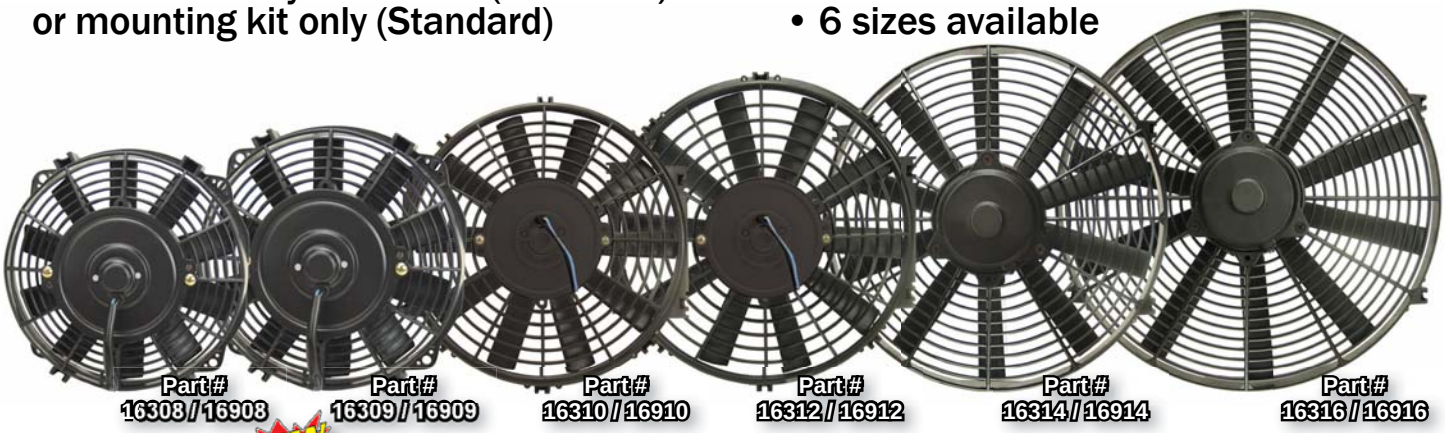

NEW

INCREASED FUEL ECONOMY

REVERSIBLE

INCREASES HORSEPOWER & TORQUE

WIRING RECOMMENDATIONS:

Premium Kit - *Includes mounting kit with adjustable thermostat & wiring*

Standard Kit - *Includes mounting kit*

See Pages 14, 15 & 16 for alternative thermostat options

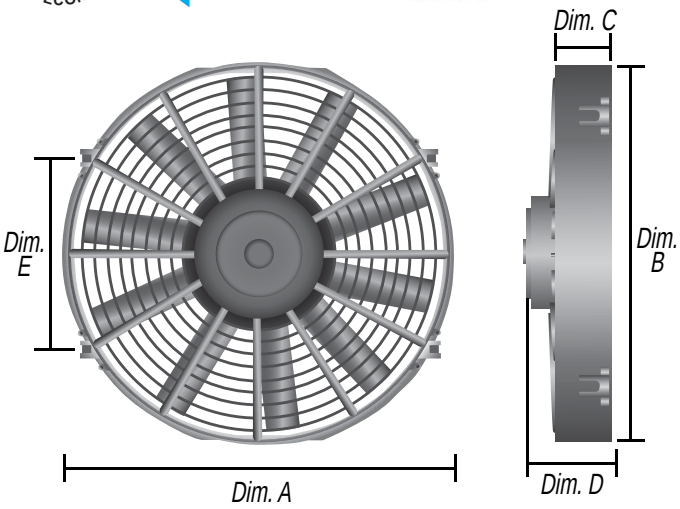

PREMIUM HARDWARE KIT

STANDARD HARDWARE KIT

Premium Part No.	Standard Part No.	Fan Size	CFM*	Amp Draw	Dim. A (Width)	Dim. B (Height)	Dim. C (Depth)	Dim. D (Overall Depth)	Dim. E (Mounting)
16308	**16908**	8”	350	5.3	8 1/8”	8”	1 1/4”	2 1/4”	4 3/8”
16309	**16909**	9”	475	5.5	9 9/16”	10 7/16”	1 1/4”	2 1/4”	8 7/16”
16310	**16910**	10”	725	6.4	11”	11 1/4”	1 1/8”	2 3/8”	5 3/4”
16312	**16912**	12”	775	9.0	11 3/8”	12 3/8”	1 1/8”	2 3/8”	4 3/4”
16314	**16914**	14”	1225	12.4	14 1/8”	14 3/4”	1 1/4”	3 1/4”	7 1/8”
16316	**16916**	16”	1680	15.5	16”	16 7/8”	1 1/4”	3 7/8”	8 1/8”

* *CFM tested at zero static pressure.*

High Amperage Adjustable Fan Controllers

Dual Fan Controllers

- Adjustable fan activation range from 150°F-240°F
- Activates Fan #1 at desired temperature
- Activates Fan #2 at temperature 10°F warmer than Fan #1
- Turn-off temperatures preset at 10°F below activation settings
- Finned, die-cast aluminum housing with bright finish
- Interchangeable probe design available in both push-in radiator probe & 3/8" NPT thread-in probe
- Includes automatic resetting circuit breaker
- Air Conditioning override circuit built-in
- Includes complete installation kit with illustrated wiring & mounting instructions

MAXIMUM CAPACITY: Two Fans - 35 Amps Per Fan

*Also used for Derale High Output Single RAD 2-speed fan applications.

Single Fan Controllers

- Adjustable fan activation range from 150°F-240°F
- Turn-off temperature preset at 10°F below activation setting
- Finned, die-cast aluminum housing with bright finish
- Interchangeable probe design available in both push-in radiator probe & 3/8" NPT thread-in probe
- Includes automatic resetting circuit breaker
- Air Conditioning override circuit built-in
- Includes complete installation kit with illustrated wiring & mounting instructions

MAXIMUM CAPACITY: Single Fan - 35 Amps

NEW

MADE IN U.S.A.

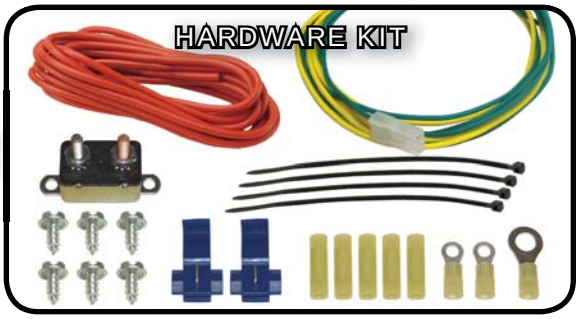

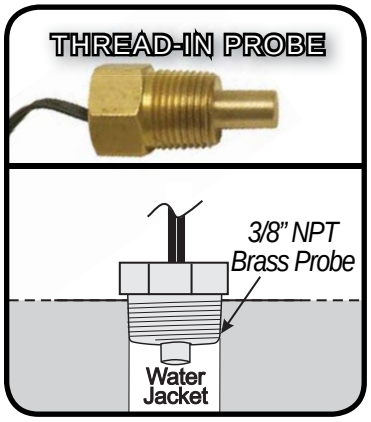

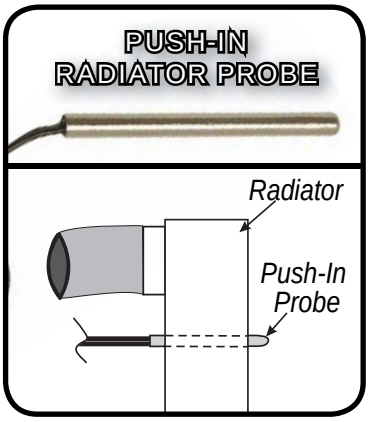

Part No.	Description
Dual Fan Controllers	
16788*	Push-In Radiator Probe
16789*	3/8" NPT Thread-In Probe
Single Fan Controllers	
16778	Push-In Radiator Probe
16779	3/8" NPT Thread-In Probe
Replacement Probes	
16750	3/8" NPT Thread-In Probe
16760	Push-In Radiator Probe

** Also used for Derale High Output single RAD 2-speed fan applications.*

Adjustable Fan Controllers

- Adjustable fan activation range from 150°F-240°F
- Turn-off temperature preset at 10°F below activation setting
- Interchangeable probe design available in both push-in radiator probe & 3/8" NPT thread-in probe
- Heavy duty 40/60 amp relay
- Air Conditioning override circuit built-in

MAXIMUM CAPACITY: 25 amps

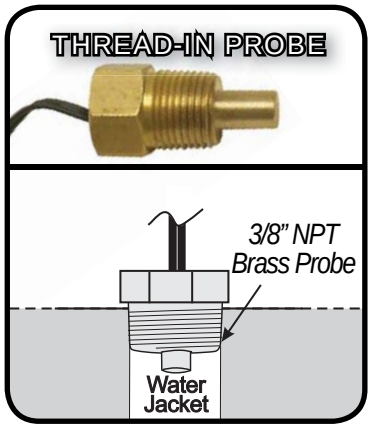

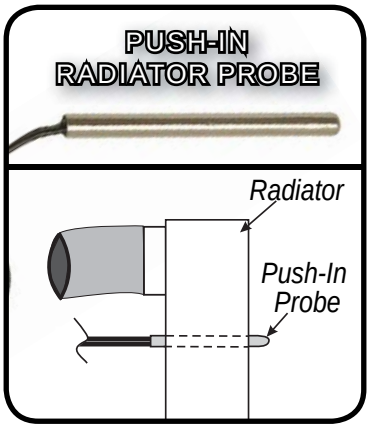

Part No.	Description
16749	3/8" NPT Thread-In Probe
16759	Push-In Radiator Probe
Replacement Probes	
16750	3/8" NPT Thread-In Probe
16760	Push-In Radiator Probe

Mechanical Fan Controller

- Adjustable fan activation range from 32°F-240°F
- Turn-off temperature preset at 10°F below activation setting
- Radiator hose probe design

MAXIMUM CAPACITY: 16 amps

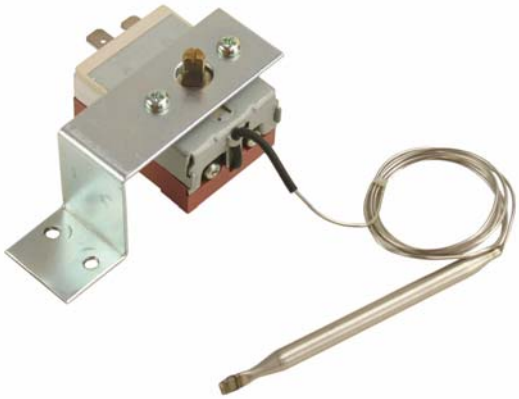

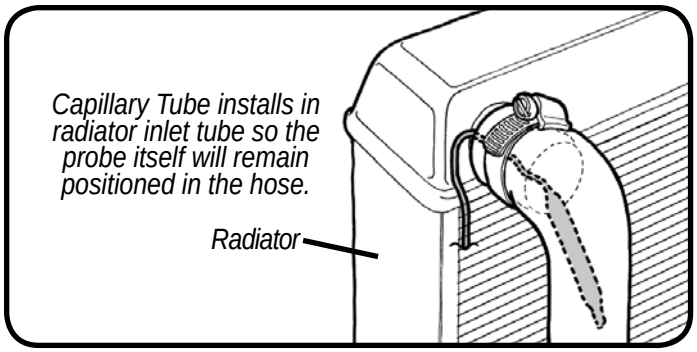

Part No.
16769

Single Stage Fan Controllers

- 180°F preset activation temperature
- Turn-off temperature preset at 15°F below activation setting
- Interchangeable probe design available in both push-in radiator probe & 3/8" NPT thread-in probe
- Universal kit part number comes with both push-in & thread-in probes (Part No.'s 18735 & 16735)

Premium Series

- Includes Heavy duty 40/60 amp relay harness
- Air Conditioning override circuit built-in

Part No.	Description
Standard Series MAXIMUM CAPACITY: 15 amps	
18735	Universal - Thread-In & Push-In Probe
18738	Push-In Radiator Probe
18739	3/8" NPT Thread-In Probe
Premium Series MAXIMUM CAPACITY: 25 amps	
16735	Universal - Thread-In & Push-In Probe
16738	Push-In Radiator Probe
16739	3/8" NPT Thread-In Probe
Replacement Parts	
16728	Thermostat Only
16736	Push-In Radiator Probe
16737	3/8" NPT Thread-In Probe

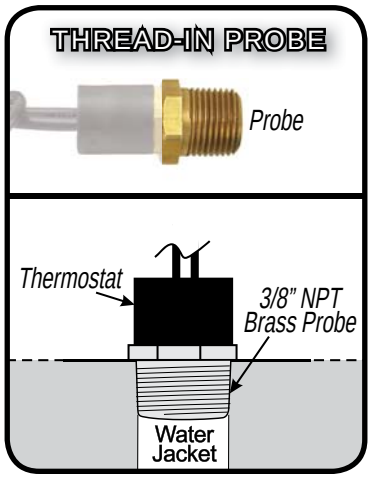

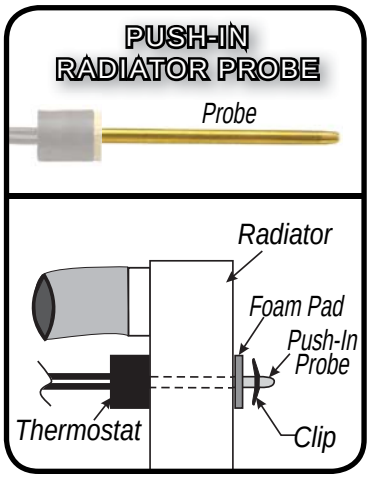

Thread-In Fan Switches

- Available in 2 preset activation temperatures - 180°F & 190°F
- Turn-off temperature preset at 15°F below activation setting
- 3/8" NPT x 1/8" NPT bushing included
- Available with & without thermostat relay harness

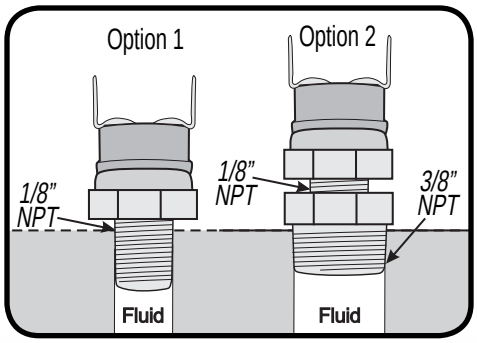

Thermostat Relay Kit Part No.	Thermostat Kit Part No.	Temperature	Thread
16720	16730	180°F	1/8" & 3/8" NPT
16721	16731	190°F	1/8" & 3/8" NPT

ELECTRIC FAN ACCESSORIES

PLASTIC ROD MOUNTING KITS

- Complete electric fan mounting kit

Part No.	Description
13001	Plastic Rod Mounting Kit
16744	Plastic Rod Kit with Mounting Feet

COMPLETE PLASTIC ROD INSTALLATION KITS

- Complete electric fan installation kit

Part No.	Description
16745	Complete Plastic Rod Installation Kit
16742	Complete Plastic Rod Kit with Mounting Feet

METAL ROD MOUNTING KITS

- Complete electric fan mounting kit
- Complete electric fan installation kit

Part No.	Description
16743	Metal Rod Mounting Kit
16741	Complete Metal Rod Installation Kit

H.O. RAD FAN PREMIUM MOUNTING KIT

- Patented adjustable mounting system for Derale part numbers 16212, 16214, 16217, 18212, 18214 & 18217
- For details and photos see page 3

Part No.
16746

CIRCUIT BREAKERS

- Auto resetting design

Part No.	Description
16751	25 amp circuit breaker
16754	50 amp circuit breaker

HIGH OUTPUT DUAL MOUNT BRACKET KIT

- Easily combines any two H.O. single RAD fans for DUAL applications. For fan details and photos see page 3.

Part No.
16200

Fits Derale part numbers 16212, 16214, 16217, 18212, 18214 & 18217

RELAY WIRE HARNESS KITS

Part No.	Description
16763	40/60 Amp Single Relay Wire Harness
16765	40/60 Amp Dual Relay Wire Harness
16764	40/60 Amp Relay

LIGHTED TOGGLE SWITCH

- 3 Pole, 12 Volt Switch

Part No.
16740

Performance Electric Fan Kit

APPLICATIONS

1987-1996 Jeep Wrangler YJ
1997-2006 Jeep Wrangler TJ
All 4 & 6 cylinder Engines

- High Output fan & shroud assembly replaces factory fan clutch/shroud using factory mounting locations
- Complete kit includes everything you need for a do-it-yourself installation
- Radiator reservoir remount brackets included (used on some 4 & 6 cyl. applications)
- Power steering remount brackets included (used on some 4 cyl. applications)
- Powdercoated metal shroud
- High Output 265-watt motor
- Thermostatically-controlled reliability
- A/C override circuit included
- Easy to follow step-by-step illustrated instructions

MADE IN U.S.A. · INCREASED FUEL ECONOMY · INCREASES HORSEPOWER & TORQUE

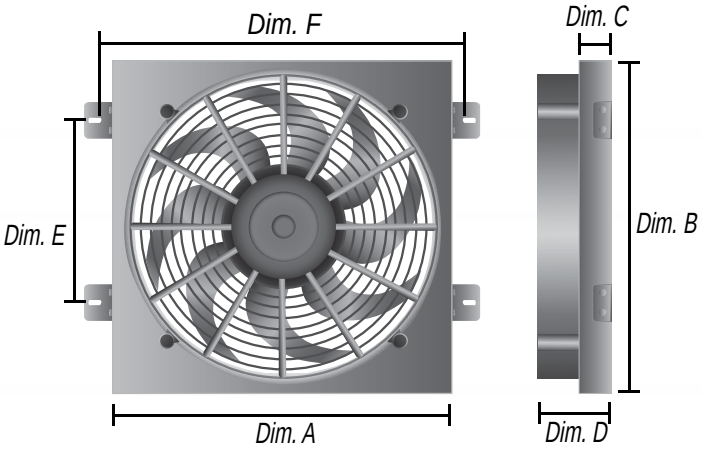

Part No.	CFM*	Amp Draw	Dim. A (Width)	Dim. B (Height)	Dim. C (Depth)	Dim. D (Overall Depth)	Dim. E (Mounting)	Dim. F (Mounting)
20161	2400	23.5	19 1/2”	18”	1 5/8”	3 5/8”	10”	22 5/8”

** CFM tested at zero static pressure.*

Automatic Transmission Cooler

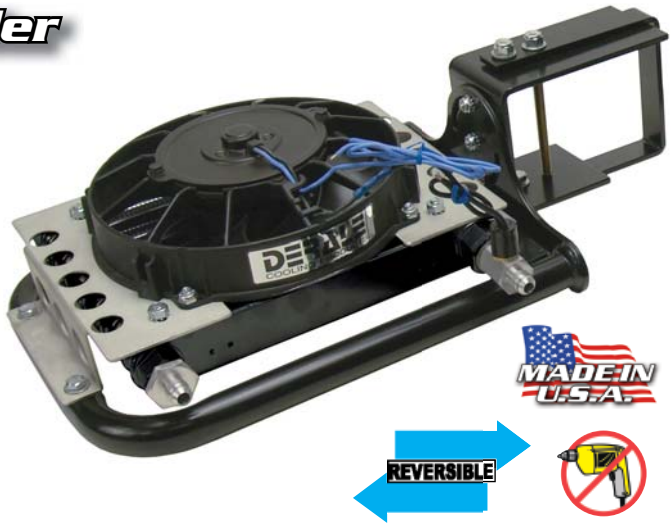

APPLICATIONS

1987-1996 Jeep Wrangler YJ
1997-2006 Jeep Wrangler TJ
All 4 & 6 cylinder Engines

- **Reduces fluid temperatures 30°F-40°F**
- **Perfect for rock crawling and off-road use when airflow is limited**
- **Complete kit includes everything you need for a do-it-yourself installation**
- **Dramatically increases transmission life**
- **Thermostatically-controlled electric fan for optimal cooling when needed**
- **Mounts to frame rail with no drilling**
- **Electric fan amp draw only 4.8 amps**

Part No.	Description
20561	Complete Kit
Replacement Parts	
13750	Replacement Cooler Assembly
20500	Frame Mount Bracket Set

HARDWARE KIT

Hyper-Cool Extreme

- Our most efficient remote-mount cooler
- Highly efficient 40-row stacked plate cooler core is pressure-tested to 250 p.s.i.
- Powerful 150-watt waterproof/dustproof (IP68 certified) 800 cfm fan motor designed for extreme duty use!
- Aluminum shroud/mounting bracket assembly is clear anodized for long-lasting corrosion resistance
- Puller application remote mount cooler only
- Available with -6AN, -8AN, -10AN or -12 fittings
- Includes illustrated installation instructions

Cooler Assembly - Includes oil cooler & two aluminum AN fittings (-6 AN, -8 AN -10 AN or -12 AN)

Recommended for:

Engine
Transmission

Thermostat switches & hardware sold separately on page 26.

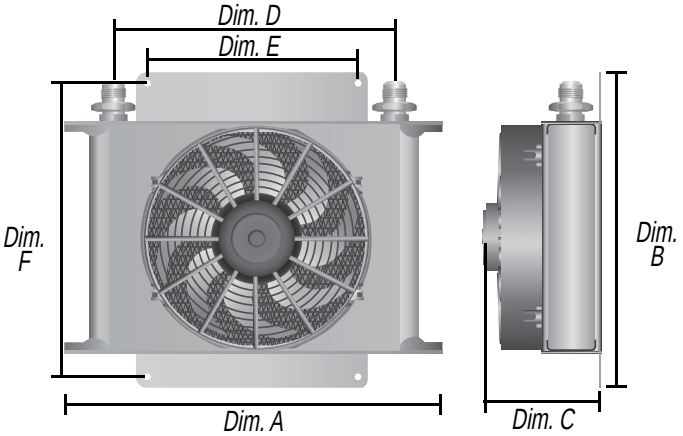

Cooler Assembly Part No.	Cooler Inlet Size	Repl. Core	Dim. A (Width)	Dim. B (Height)	Dim. C (Depth)	Dim. D (Inlets)	Dim. E (Mounting)	Dim. F (Mounting)
13870	-6 AN	**54006**	13”	14 7/8”	5 5/8”	10”	7 1/2”	13 9/16
15870	-8 AN	**54008**	13”	14 7/8”	5 5/8”	10”	7 1/2”	13 9/16
15875	-10 AN	**54010**	13”	14 7/8”	5 5/8”	10”	7 1/2”	13 9/16
15876	-12 AN	**54012**	13”	14 7/8”	5 5/8”	10”	7 1/2”	13 9/16

REMOTE MOUNT FLUID COOLERS

Hyper-Cool

- Mounts anywhere space permits
- Electric fan supplies optimum airflow
- Extends engine or transmission life
- High efficiency Stacked Plate cooler
- Clear anodized aluminum shroud
- 500 CFM reversible Tornado electric fan
- Available with -6 AN, -8 AN or -10 AN fittings

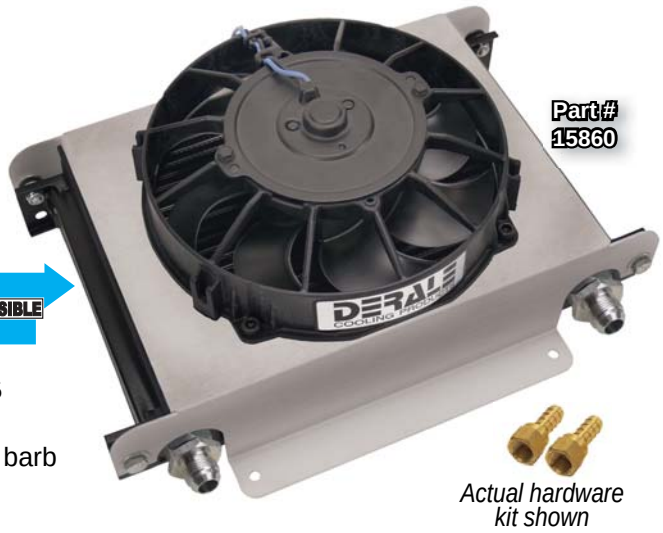

Actual hardware kit shown

Cooler Assembly - Includes complete cooler assembly, two aluminum AN fittings (-6 AN, -8 AN or -10 AN) and two brass hose barb fittings (-6 AN x 3/8" barb, -8 AN x 1/2" barb or -10 AN x 1/2" barb)

Transmission Cooler Kit - Includes complete cooler assembly, 180°F In-line thermostat, four AN to hose barb adapter fittings, 10ft OEM spec hose, four stainless hose clamps, electrical connectors and 1/4" mounting hardware

13960 - Also Includes two aluminum -6 AN cooler fittings, two 5/16" x 3/8" hose barb compression fittings and two 3/8" x 3/8" compression fittings

15960 - Also Includes two aluminum -8 AN cooler fittings and two 1/2" x 1/2" hose barb compression fittings

Engine Oil Cooler Kit - Includes complete cooler assembly, Universal* thermostatic sandwich adapter and adapter plate, 13/16-16", 3/4-16", 18mm, 20mm & 22mm sleeve nuts, two aluminum -8 AN fittings, four brass hose barb fittings, 180°F -8 AN In-line thermostat, 10ft 1/2" OEM spec hose, four stainless hose clamps and 1/4" mounting hardware

***Universal application -** One part no. fits most automotive applications.

See Engine Adapter Quick Reference Guide on page 43 for specific applications.

Recommended for:

Engine **Transmission**

Thermostat switches & hardware sold separately on page 26.

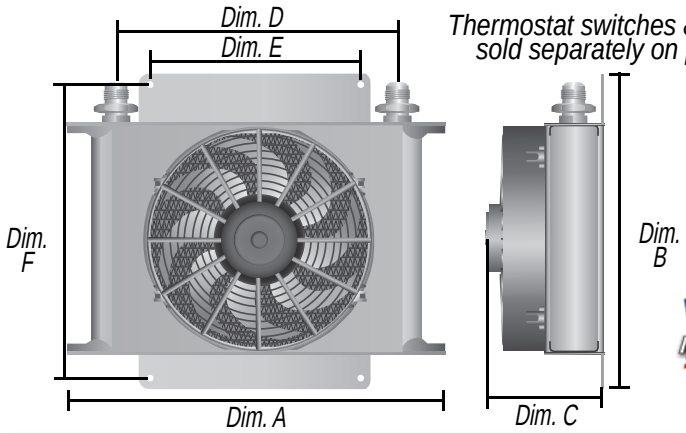

MADE IN U.S.A.

REPLACEMENT COOLER CORE

TRANSMISSION COOLER HARDWARE KIT

ENGINE OIL COOLER HARDWARE KIT

Cooler Assembly Part No.	Cooler Inlet Size	Trans Cooler Kit Part No.	Engine Oil Cooler Kit Part No.	Repl. Core	Dim. A (Width)	Dim. B (Height)	Dim. C (Depth)	Dim. D (Inlets)	Dim. E (Mounting)	Dim. F (Mounting)
13760	-6 AN	**13960**	-----	**52506**	13"	10"	5 5/8"	10"	7 1/2"	9"
15860	-8 AN	**15960**	**15660**	**52508**	13"	10"	5 5/8"	10"	7 1/2"	9"
15865	-10 AN	-----	-----	**52510**	13"	10"	5 5/8"	10"	7 1/2"	9"

Atomic-Cool

- Mounts anywhere space permits
- Electric fan supplies optimum airflow
- High efficiency OEM-style plate & fin cooler
- Clear anodized aluminum brackets
- 500 CFM reversible Tornado electric fan
- Available with -6 AN or -8 AN fittings

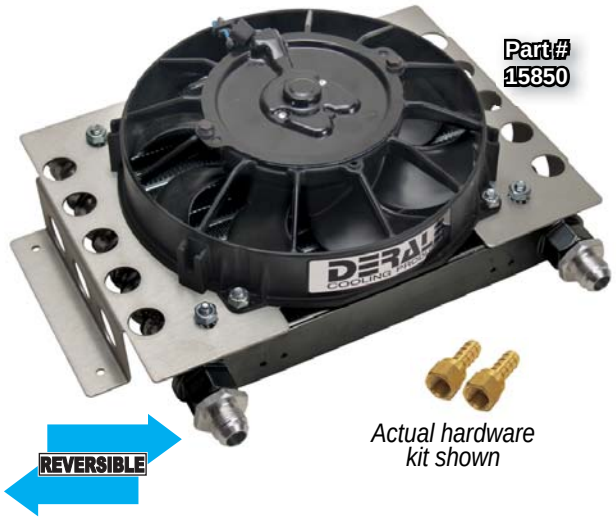

Cooler Assembly - Includes complete cooler assembly, two aluminum AN fittings (-6 AN or -8 AN) and two brass hose barb fittings (-6 AN x 3/8" barb or -8 AN x 1/2" barb)

Transmission Cooler Kit - Includes complete cooler assembly, 180°F In-line thermostat, four AN to hose barb adapter fittings, 10ft OEM spec hose, four stainless hose clamps, electrical connectors and 1/4" mounting hardware

13950 - Also Includes two aluminum -6 AN cooler fittings, two 5/16" x 3/8" hose barb compression fittings and two 3/8" x 3/8" compression fittings

15950 - Also Includes two aluminum -8 AN cooler fittings and two 1/2" x 1/2" hose barb compression fittings

Engine Oil Cooler Kit - Includes complete cooler assembly, Universal* thermostatic sandwich adapter and adapter plate, 13/16-16", 3/4-16", 18mm, 20mm & 22mm sleeve nuts, two aluminum -8 AN fittings, four brass hose barb fittings, 180°F -8 AN In-line thermostat, 10ft 1/2" OEM spec hose, four stainless hose clamps and 1/4" mounting hardware

***Universal application -** One part no. fits most automotive applications.

See Engine Adapter Quick Reference Guide on page 43 for specific applications.

Recommended for:

Engine	Power Steering
Transmission	Fuel

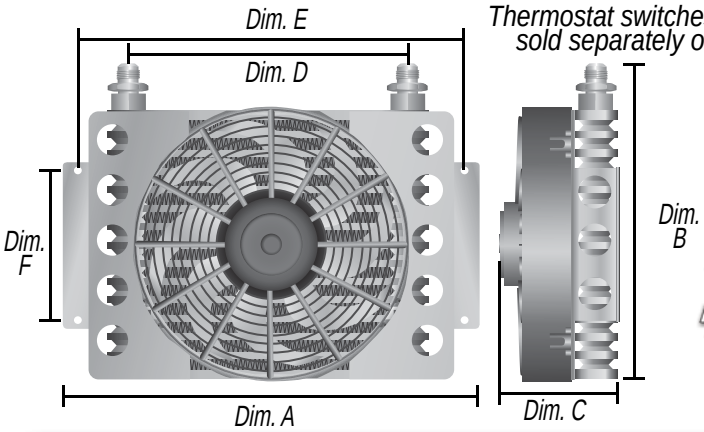

Thermostat switches & hardware sold separately on page 26.

Cooler Assembly Part No.	Cooler Inlet Size	Trans Cooler Kit Part No.	Engine Oil Cooler Kit Part No.	Repl. Core	Dim. A (Width)	Dim. B (Height)	Dim. C (Depth)	Dim. D (Inlets)	Dim. E (Mounting)	Dim. F (Mounting)
13750	-6 AN	**13950**	**-----**	**13751**	12 3/4"	9 3/8"	4 5/16"	8 9/16"	11 5/8"	4"
15850	-8 AN	**15950**	**15450**	**15851**	12 3/4"	9 3/8"	4 5/16"	8 9/16"	11 5/8"	4"

Electra-Cool

- Mounts anywhere space permits
- Electric fan supplies optimum airflow
- Offered in 16 & 8 pass tube & fin cooler core
- Clear anodized aluminum brackets
- 650 CFM reversible Tornado electric fan
- Available with -6 AN or -8 AN fittings

Actual hardware kit shown

Cooler Assembly - Includes complete cooler assembly, and two brass hose barb fittings (-6 AN x 3/8" barb or -8 AN x 1/2" barb)

Transmission Cooler Kit - Includes complete cooler assembly, 180°F In-line thermostat, four AN to hose barb adapter fittings, 10ft OEM spec hose, four stainless hose clamps, electrical connectors and 1/4" mounting hardware

13900 - Also Includes two aluminum -6 AN cooler fittings, two 5/16" x 3/8" hose barb compression fittings and two 3/8" x 3/8" compression fittings

15900 - Also Includes two aluminum -8 AN cooler fittings and two 1/2" x 1/2" hose barb compression fittings

Engine Oil Cooler Kit - Includes complete cooler assembly, Universal* thermostatic sandwich adapter and adapter plate, 13/16-16", 3/4-16", 18mm, 20mm & 22mm sleeve nuts, two aluminum -8 AN fittings, four brass hose barb fittings, 180°F - 8 AN In-line thermostat, 10ft 1/2" OEM spec hose, four stainless hose clamps and 1/4" mounting hardware

***Universal application -** One part no. fits most automotive applications.

See Engine Adapter Quick Reference Guide on page 43 for specific applications.

Recommended for:

Engine
Transmission
Power Steering
Fuel

Thermostat switches & hardware sold separately on page 26.

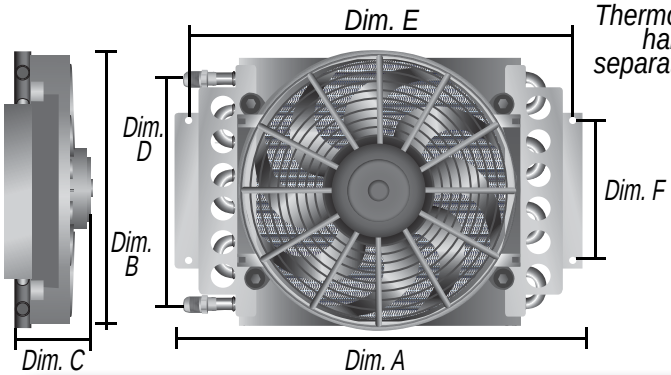

MADE IN U.S.A.

Cooler Assembly Part No.	Cooler Inlet Size	Trans Cooler Kit Part No.	Engine Oil Cooler Kit Part No.	Repl. Core	Core	Dim. A (Width)	Dim. B (Height)	Dim. C (Depth)	Dim. D (Inlets)	Dim. E (Mounting)	Dim. F (Mounting)
13700	-6 AN	**13900**	-----	**13300**	16 Pass	15 3/4"	11 1/2"	5"	8 3/4"	14 3/4"	5 1/4"
15800	-8 AN	**15900**	**15500**	**15300**	16 Pass	15 3/4"	11 1/2"	5"	8 3/4"	14 3/4"	5 1/4"
13720	-6 AN	-----	-----	**13320**	8 Pass	15 3/4"	11 1/2"	4"	8 3/4"	14 3/4"	5 1/4"
15820	-8 AN	-----	-----	**15320**	8 Pass	15 3/4"	11 1/2"	4"	8 3/4"	14 3/4"	5 1/4"

Electra-Cool Dual Circuit

2 in 1 Cooler Design

- Reversible 10” 650 CFM Tornado electric fan supplies optimum airflow
- Tube & fin cooler core (-8 AN fittings) available in 4 & 4 pass or 8 & 8 pass configurations
- Cools two systems with one compact package
- Clear anodized aluminum brackets

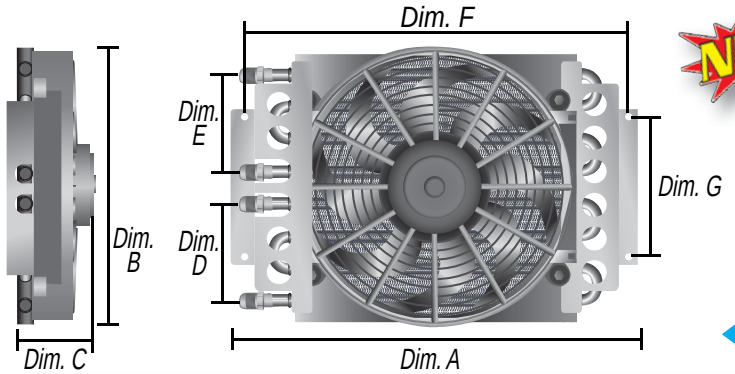

NEW

Part # 15200

With (2) -8 AN x 3/8” & (2) -8 AN x 1/2” Brass Hose Barb Fittings

MADE IN U.S.A.

REVERSIBLE

Recommended for any two:

Engine
Transmission
Power Steering
Fuel

Cooler Assembly Part No.	Cooler Inlet Size	Repl. Core	No. of Passes	Dim. A (Width)	Dim. B (Height)	Dim. C (Depth)	Dim. D (Inlets)	Dim. E (Inlets)	Dim. F (Mounting)	Dim. G (Mounting)
15200	-8 AN	**15301**	8 & 8 Pass	15 3/4”	11 1/2”	5”	4 1/8”	4 1/8”	14 3/4”	5 1/4”
15220	-8 AN	**15321**	4 & 4 Pass	15 3/4”	11 1/2”	4”	3 3/4”	3 3/4”	14 3/4”	5 1/4”

Econo-Cool Dual Circuit

2 in 1 Cooler Design

Part # 15230

- Reversible 7” 400 CFM Tornado electric fan supplies optimum airflow
- Tube & fin cooler core (-8 AN fittings) with separate 4 pass & 2 pass configuration
- Cools two systems with one compact package
- Clear anodized aluminum brackets

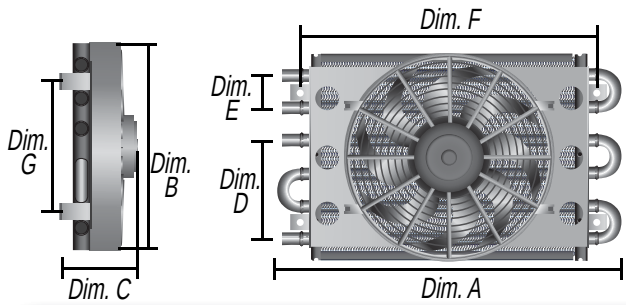

NEW

MADE IN U.S.A.

With (2) -8 AN x 3/8” & (2) -8 AN x 1/2” Brass Hose Barb Fittings

REVERSIBLE

Recommended for any two:

Engine
Transmission
Power Steering
Fuel

Cooler Assembly Part No.	Cooler Inlet Size	Repl. Core	No. of Passes	Dim. A (Width)	Dim. B (Height)	Dim. C (Depth)	Dim. D (Inlets)	Dim. E (Inlets)	Dim. F (Mounting)	Dim. G (Mounting)
15230	-8 AN	**15331**	4 & 2 Pass	12 3/4”	7 5/8”	3 3/4”	3 3/4”	1 1/4”	10 7/8”	5”

REMOTE MOUNT FLUID COOLERS

Econo-Cool

- Efficient copper/aluminum tube & fin cooler
- Reversible 7” 400 CFM Tornado electric fan
- Offered in 11/32” & 1/2” barb inlets
- Clear anodized aluminum brackets

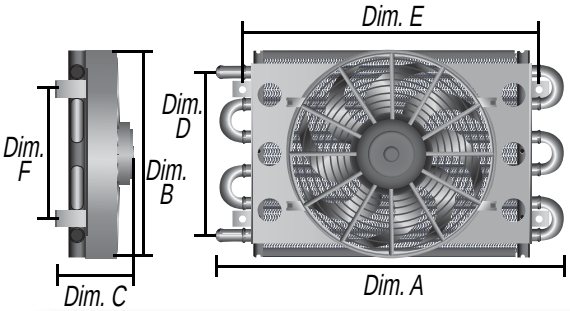

MADE IN U.S.A.

REVERSIBLE

Recommended for:
Engine
Transmission
Power Steering
Fuel

Cooler Assembly Part No.	Cooler Inlet Size	Repl. Core	No. of Passes	Dim. A (Width)	Dim. B (Height)	Dim. C (Depth)	Dim. D (Inlets)	Dim. E (Mounting)	Dim. F (Mounting)
13730	11/32” Barb	**13731**	6 Pass	12 3/4”	7 5/8”	3 3/4”	6 1/4”	10 7/8”	5”
15830	1/2” Barb	**15831**	6 Pass	12 3/4”	7 5/8”	3 3/4”	6 1/4”	10 7/8”	5”

Dyno-Cool Remote Coolers

- Efficient copper/aluminum tube & fin cooler
- Reversible low profile electric fan
- Offered in 4 sizes with 11/32” barb or -6 AN inlets

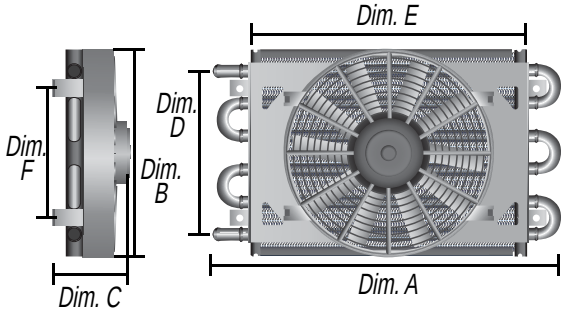

MADE IN U.S.A.

REVERSIBLE

Recommended for:
Transmission
Power Steering
Fuel

Cooler Assembly -6 AN Inlets Part No.	Cooler Assembly 11/32” Barb Inlets Part No.	No. of Passes	Dim. A (Width) -6 AN / 11/32”	Dim. B (Height)	Dim. C (Depth)	Dim. D (Inlets)	Dim. E (Mounting)	Dim. F (Mounting)
12730	**12740**	6 Pass	13 5/8” / 12 3/4”	7 5/8”	3 5/8”	6 1/4”	10 7/8”	5”
12731	**12741**	6 Pass	17 1/2” / 16 5/8”	7 5/8”	3 3/4”	6 1/4”	14 3/4”	5”
12732	**12742**	8 Pass	13 5/8” / 12 3/4”	10 1/4”	3 5/8”	8 3/4”	10 7/8”	5”
12733	**12743**	8 Pass	17 1/2” / 16 5/8”	10 1/4”	3 3/4”	8 3/4”	14 3/4”	5”

In-line Fluid Thermostats

Standard Series

- 180°F preset turn-on temperature
- Turn-off temperature is preset at 165°F
- Avail. in -6 AN or -8 AN aluminum housing
- Brass hose barb fittings included

MADE IN U.S.A.

MAXIMUM CAPACITY: 15 amps

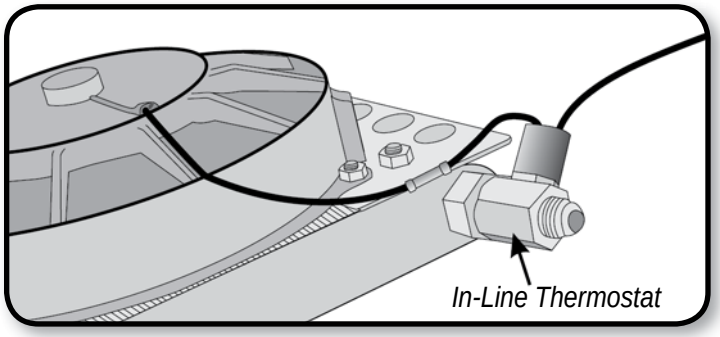

Premium Series

- Avail. in 180°F & 190°F turn-on temp
- Turn-off temperature is preset 15°F below turn-on temperature
- Available in -6 AN, -8 AN or -10 AN aluminum fittings
- Blue anodized aluminum swivel housing

MADE IN U.S.A.

MAXIMUM CAPACITY: 15 amps

180°F Part No.	190°F Part No.	Description
Standard Series		
13021	-----	-6 AN x -6 AN
15721	-----	-8 AN x -8 AN
16728	-----	Thermostat Only
Premium Series		
35020	35025	-6 AN x -6 AN
35021	35026	-8 AN x -8 AN
35022	35027	-10 AN x -10 AN
16730	16731	Thermostat Only

Remote Cooler Mounting Kits

Transmission Cooler Kits

- Offered with 5/16”, 3/8” or 1/2” cooler line & compression fittings to fit every application

Transmission Cooler Kit - Includes 180°F In-line thermostat, 10ft OEM spec hose, two compression fittings and installation hardware

MADE IN U.S.A.

Part No.	Description
13020	5/16” Cooler lines 3/8” Hose Barb
13022	3/8” Cooler lines 3/8” Hose Barb
13023	1/2” Cooler lines 1/2” Hose Barb

Engine Oil Cooler Kit

Engine Oil Cooler Kit - Includes universal* thermostatic sandwich adapter and adapter plate, 13/16-16”, 3/4-16”, 18mm, 20mm & 22mm sleeve nuts, 180°F In-line thermostat, 10 feet OEM spec hose, and mounting hardware

*Universal application - One part no. fits most automotive applications. See Engine Adapter Quick Reference Guide on page 43 for specific applications.

MADE IN U.S.A.

Part No.	Description
15752	Most Applications

DUAL CIRCUIT FLUID COOLERS

- 1/2” copper tubing expanded into formed aluminum cooling fins
- Cools two systems with one compact package
- Available in push-on or -8 AN inlet sizes
- Extruded plastic cooling fin guards
- Black powdercoat finish
- Offered in 5 sizes

Recommended for any two:

Engine
Transmission
Power Steering
Fuel

2 in 1 Cooler Design

MADE IN U.S.A.

NEW

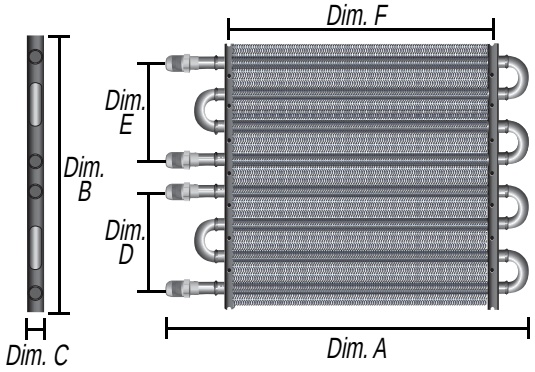

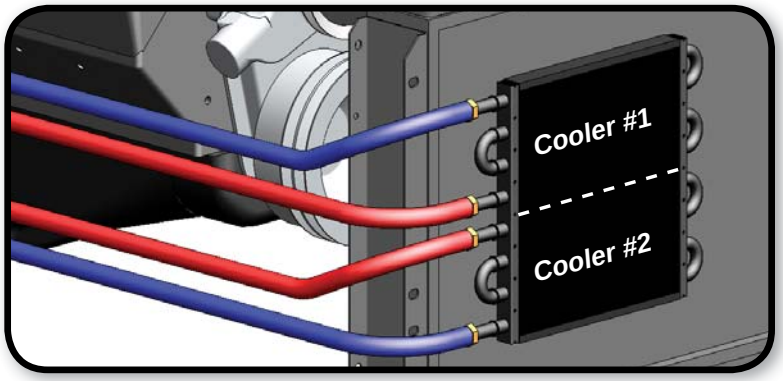

Part No.	Cooler Inlet Size(s)	No. of Passes	Dim. A (Width)	Dim. B (Height)	Dim. C (Depth)	Dim. D (Inlets)	Dim. E (Inlets)	Dim. F (Mounting)
13302	(2) 11/32” (2) 1/2” Barb	4 & 6	16 13/16”	12 5/8”	3/4”	3 3/4”	6 1/4”	13 7/16”
13322	(2) 11/32” (2) 1/2” Barb	4 & 4	12 13/16”	10 1/4”	3/4”	3 3/4”	3 3/4”	9 5/8”
15301	(4) -8 AN	8 & 8	13 15/16”	10 1/2”	1 3/4”	4 1/8”	4 1/8”	9 5/8”
15321	(4) -8 AN	4 & 4	13 15/16”	10 1/4”	3/4”	3 3/4”	3 3/4”	9 5/8”
15331	(4) -8 AN	4 & 2	13 15/16”	7 5/8”	3/4”	3 3/4”	1 1/4”	9 5/8”

STACKED PLATE COOLERS

- Most efficient heat-exchanger available, built-in high-flow turbulators
- Sturdy furnace-brazed aluminum construction tested to 250 p.s.i.
- -10AN / 7/8”-14 O-ring cooler inlets & 4 integrated mounting points
- Available in 6 cooler core sizes: 10, 16, 19, 25, 34 & 40-rows

NEW

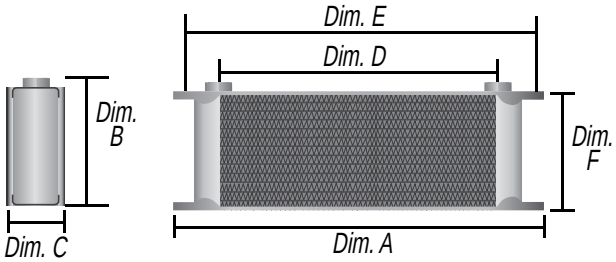

Recommended for:

Engine
Power Steering
Transmission
Differential
Fuel

Part No.	No. of Rows	Inlet Size	Dim. A (Width)	Dim. B (Height)	Dim. C (Depth)	Dim. D (Inlets)	Dim. E (Mounting)	Dim. F (Mounting)
Cooler Only (No Fittings)								
51078	10	-10 AN O-ring Female	13”	3 9/16”	2”	10”	12 1/4”	2 7/8”
51678	16	-10 AN O-ring Female	13”	5 9/16”	2”	10”	12 1/4”	4 7/8”
51978	19	-10 AN O-ring Female	13”	6 7/16”	2”	10”	12 1/4”	5 3/4”
52578	25	-10 AN O-ring Female	13”	8 5/16”	2”	10”	12 1/4”	7 5/8”
53478	34	-10 AN O-ring Female	13”	10 7/8”	2”	10”	12 1/4”	10 1/16”
54078	40	-10 AN O-ring Female	13”	12 3/4”	2”	10”	12 1/4”	12”

Aluminum Cooler Fittings & Mounting Brackets

- Bright aluminum fittings available in -6AN, -8AN, -10AN & -12AN

- 4 way bracket system
- Black powdercoat finish

MADE IN U.S.A.

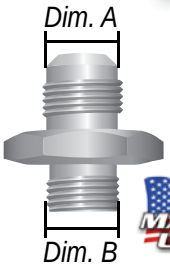

MADE IN U.S.A.

Part No.	Dim. A	Dim. B	U/M
59006	-6 AN	-10 AN / 7/8”-14 O-ring	Each
59008	-8 AN	-10 AN / 7/8”-14 O-ring	Each
59010	-10 AN	-10 AN / 7/8”-14 O-ring	Each
59012	-12 AN	-10 AN / 7/8”-14 O-ring	Each
50020	Bracket Kit - 4 mounting brackets		Set

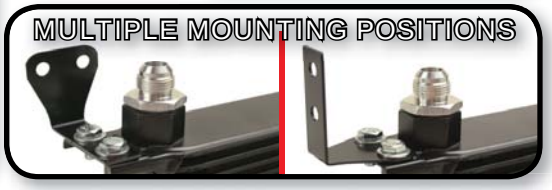

STACKED PLATE COOLER KITS

- Most efficient heat-exchanger available, built-in high-flow turbulators
- Sturdy furnace-brazed aluminum construction tested to 250 p.s.i.
- -10AN / 7/8”-14 O-ring cooler inlets & 4 integrated mounting points
- Cooler kit with fittings offered in -6 AN, -8 AN & -10 AN
- Available in 6 cooler core sizes: 10, 16, 19, 25, 34 & 40-rows

NEW

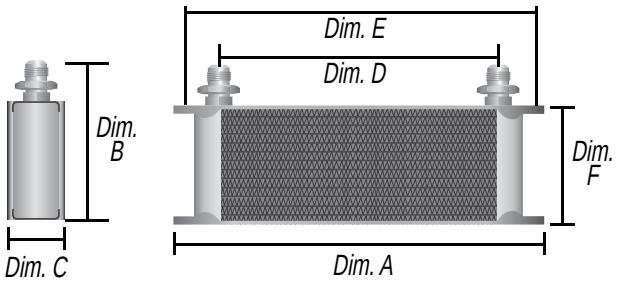

Recommended for:

Engine
Power Steering
Transmission
Differential
Fuel

Part No.	No. of Rows	Inlet Size	Dim. A (Width)	Dim. B (Height)	Dim. C (Depth)	Dim. D (Inlets)	Dim. E (Mounting)	Dim. F (Mounting)
Cooler Kit (With Fittings)								
51006	10	-6 AN Male	13”	4 7/16”	2”	10”	12 1/4”	2 7/8”
51008		-8 AN Male		4 9/16”				
51010		-10 AN Male		4 11/16”				
51606	16	-6 AN Male	13”	6 7/16”	2”	10”	12 1/4”	4 7/8”
51608		-8 AN Male		6 9/16”				
51610		-10 AN Male		6 11/16”				
51906	19	-6 AN Male	13”	7 5/16”	2”	10”	12 1/4”	5 3/4”
51908		-8 AN Male		7 7/16”				
51910		-10 AN Male		7 9/16”				
52506	25	-6 AN Male	13”	9 3/16”	2”	10”	12 1/4”	7 5/8”
52508		-8 AN Male		9 5/16”				
52510		-10 AN Male		9 9/16”				
53406	34	-6 AN Male	13”	11 13/16”	2”	10”	12 1/4”	10 1/16”
53408		-8 AN Male		11 7/8”				
53410		-10 AN Male		12 1/16”				
54006	40	-6 AN Male	13”	13 11/16”	2”	10”	12 1/4”	12”
54008		-8 AN Male		13 3/42”				
54010		-10 AN Male		13 7/8”				

Series 10000 Stacked Plate Transmission Cooler Kits

- Most efficient heat-exchanger available
- Extends transmission service life by preventing heat-related component failure & fluid breakdown
- Improves transmission performance
- Sturdy furnace-brazed aluminum construction tested to 250 p.s.i.
- Hardware kit includes -6AN bright aluminum fittings, hose barb adaptors, high-pressure/high temperature hose, Insta-Dapt radiator adapter & mounting hardware
- 3 sizes available

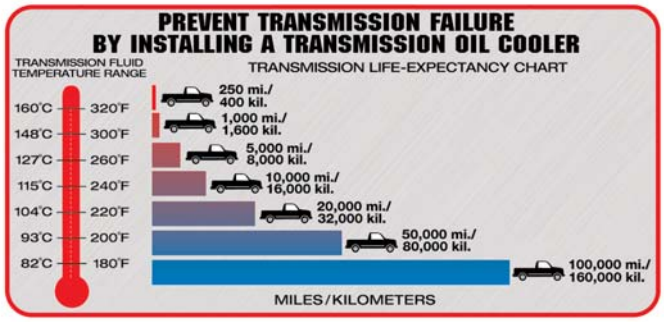

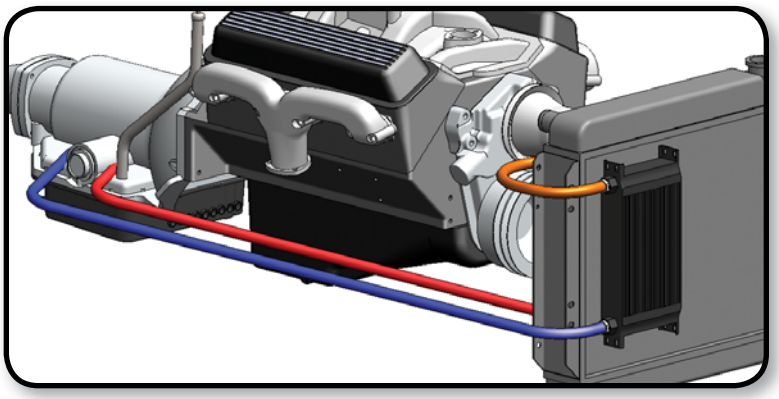

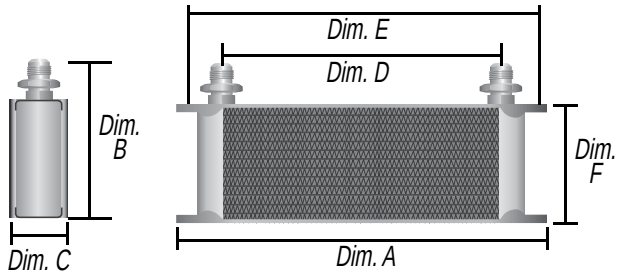

Part No.	No. of Rows	Dim. A (Width)	Dim. B (Height)	Dim. C (Depth)	Dim. D (Inlets)	Dim. E (Mounting)	Dim. F (Mounting)
13401	**10**	13”	4 7/16”	2”	10”	12 1/4”	2 7/8”
13402	**16**	13”	6 7/16”	2”	10”	12 1/4”	4 7/8”
13403	**19**	13”	7 5/16”	2”	10”	12 1/4”	5 3/4”

Series 9000 Plate & Fin Transmission Cooler Kits

- Extends transmission service life by preventing heat-related component failure & fluid breakdown
- Improves transmission performance
- Sturdy furnace-brazed aluminum construction
- Integrated, high-flow 1-1/4” turbulators maximize cooling efficiency
- 1/2” NPT female cooler inlets
- Integrated four-point mounting brackets
- Hardware kit includes brass 1/2” NPT x 3/8” hose barb adapters, high pressure/high temperature hose, Insta-Dapt radiator adapter & mounting hardware
- 4 sizes available

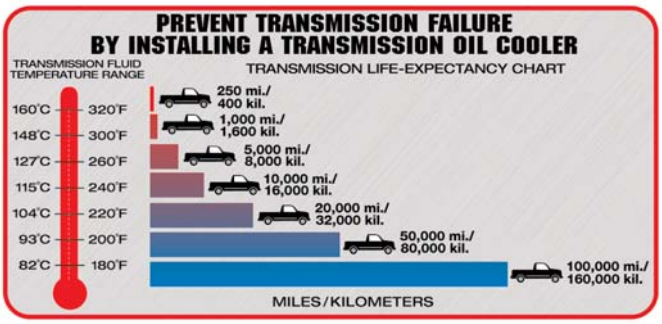

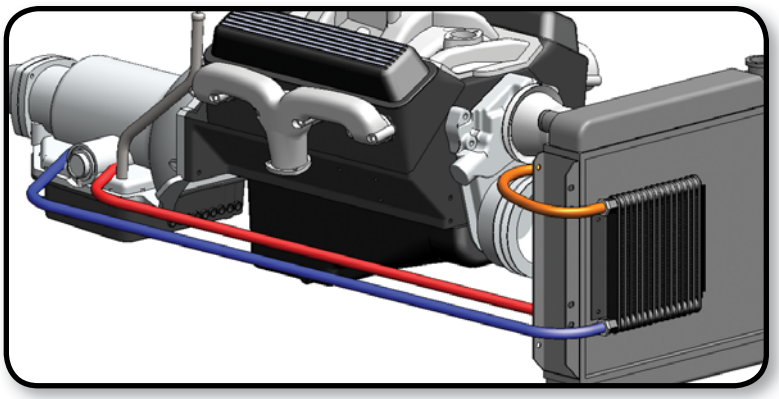

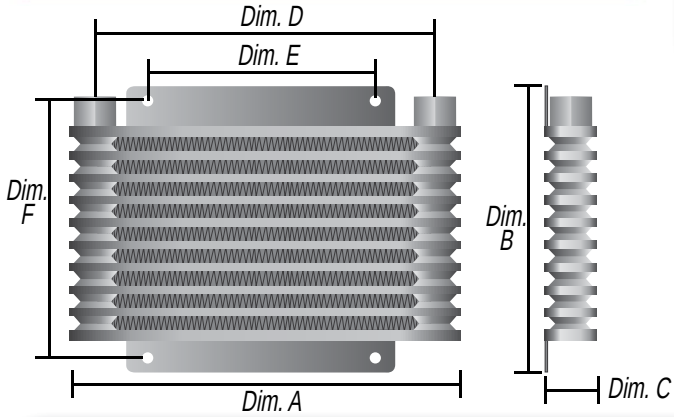

Part No.	GVW	Dim. A (Width)	Dim. B (Height)	Dim. C (Depth)	Dim. D (Inlets)	Dim. E (Mounting)	Dim. F (Mounting)
13611	14000	10 1/8”	3 7/8”	1 1/4”	8 7/8”	6 3/4”	3”
13612	17500	10 1/8”	6 3/8”	1 1/4”	8 7/8”	6 3/4”	5 1/2”
13613	22000	10 1/8”	8 7/8”	1 1/4”	8 7/8”	6 3/4”	8”
13614	24000	10 1/8”	11 7/8”	1 1/4”	8 7/8”	6 3/4”	10 1/2”

Series 8000 Plate & Fin Transmission Cooler Kits

- Extends transmission service life by preventing heat-related component failure & fluid breakdown
- Improves transmission performance
- Sturdy furnace-brazed aluminum construction
- Integrated, high-flow 3/4” turbulators maximize cooling efficiency
- 11/32” hose barb inlets
- Hardware kit includes high pressure/high temperature hose, Insta-Dapt radiator adapter & mounting hardware
- 4 sizes available

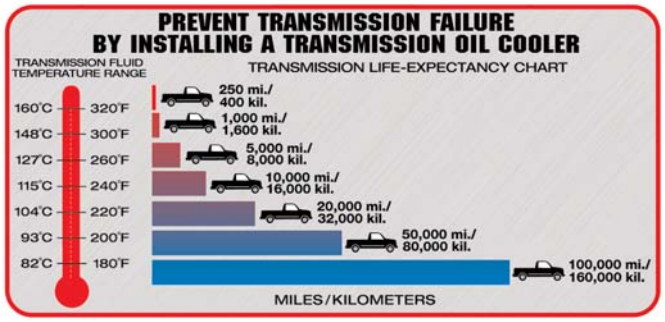

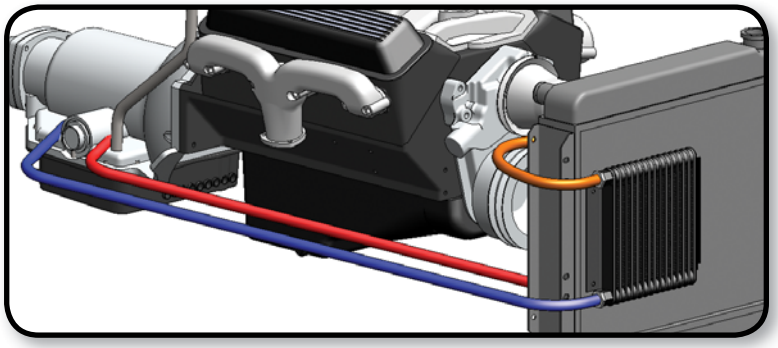

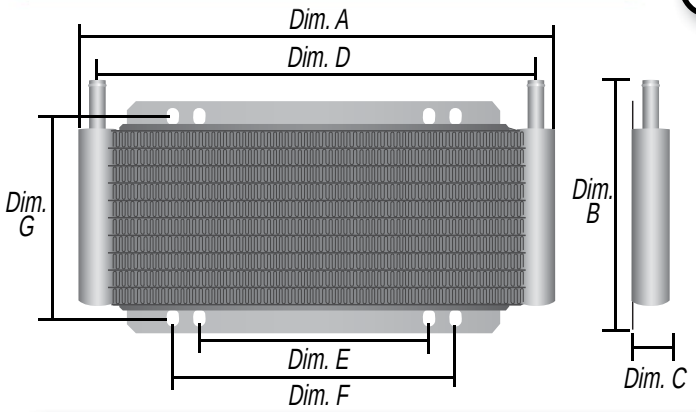

Part No.	GVW	Dim. A (Width)	Dim. B (Height)	Dim. C (Depth)	Dim. D (Inlets)	Dim. E (Mounting)	Dim. F (Mounting)	Dim. G (Mounting)
13501	15500	11”	5 3/4”	7/8”	10 1/4”	5 1/4”	6 3/4”	4 1/2”
13502	17500	11”	7 1/4”	7/8”	10 1/4”	5 1/4”	6 3/4”	6 1/8”
13503	20500	11”	8 3/4”	7/8”	10 1/4”	5 1/4”	6 3/4”	8”
13504	22500	11”	12”	7/8”	10 1/4”	5 1/4”	6 3/4”	10 1/2”

Series 7000 Tube & Fin Transmission Cooler Kits

- Extends transmission service life by preventing heat-related component failure & fluid breakdown
- Improves transmission performance
- 11/32” hose barb inlets
- 1/2” copper tubing expanded into formed aluminum cooling fins
- Embossed turbulators in each tube agitate fluid for maximum heat transfer
- Extruded plastic cooling fin guards
- Hardware kit includes high pressure, high temperature hose, Insta-Dapt radiator adapter with two mounting hardware options – plastic rod & rigid mount system
- 8 sizes available

MADE IN U.S.A.

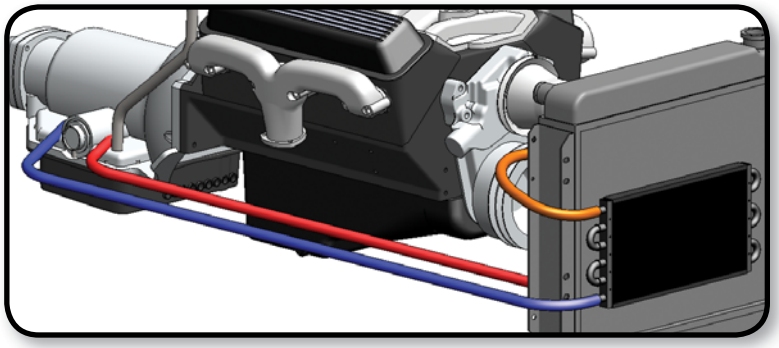

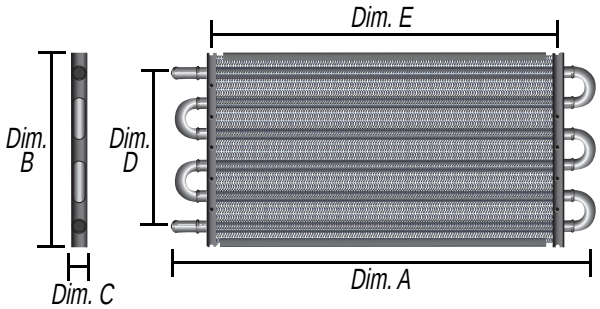

Display Box	Display Board	GVW	Dim. A (Width)	Dim. B (Height)	Dim. C (Depth)	Dim. D (Inlets)	Dim. E (Mounting)
13101	**13201**	12000	12 3/4”	5 1/8”	3/4”	3 3/4”	9 5/8”
13102	**13202**	14000	16 5/8”	5 1/8”	3/4”	3 3/4”	13 3/4”
13103	**13203**	18500	16 5/8”	7 5/8”	3/4”	6 1/4”	13 3/4”
13104	**13204**	20500	16 5/8”	10 1/4”	3/4”	8 3/4”	13 3/4”
13105	**13205**	22500	16 5/8”	12 5/8”	3/4”	11 1/4”	13 3/4”
13106	**13206**	15500	12 3/4”	7 5/8”	3/4”	6 1/4”	9 5/8”
13107	**13207**	18200	12 3/4”	10 1/4”	3/4”	8 3/4”	9 5/8”
13108	**13208**	20500	12 3/4”	12 5/8”	3/4”	11 1/4”	9 5/8”

Series 7000 – AN Tube & Fin Coolers

- Prevents heat-related component failure & fluid breakdown
- 1/2” copper tubing expanded into aluminum cooling fins
- Embossed turbulators agitate fluid for maximum heat transfer
- -6AN male cooler fittings
- Extruded plastic cooling fin guards
- Transmission Cooler kit includes high pressure/high temperature hose, Insta-Dapt radiator adapter with complete mounting system
- Offered in 8 cooler sizes
- 3 complete Transmission Cooler kits available

MADE IN U.S.A.

Recommended for:

Transmission
Power Steering
Fuel

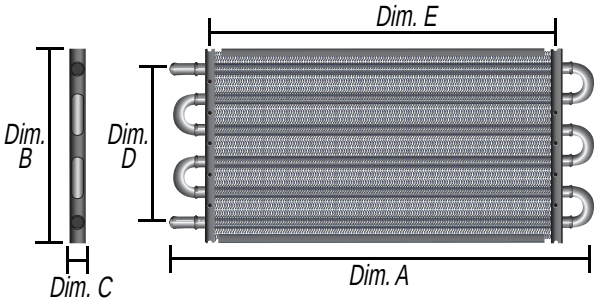

Cooler Only Part No.	Transmission Cooler Kit Part No.	Dim. A (Width)	Dim. B (Height)	Dim. C (Depth)	Dim. D (Inlets)	Dim. E (Mounting)
13311	-----	13 1/2”	5 1/8”	3/4”	3 3/4”	9 5/8”
13312	-----	17 1/2”	5 1/8”	3/4”	3 3/4”	13 3/4”
13313	13303	17 1/2”	7 5/8”	3/4”	6 1/4”	13 3/4”
13314	13304	17 1/2”	10 1/4”	3/4”	8 3/4”	13 3/4”
13315	-----	17 1/2”	12 5/8”	3/4”	11 1/4”	13 3/4”
13316	13306	13 1/2”	7 5/8”	3/4”	6 1/4”	9 5/8”
13317	-----	13 1/2”	10 1/4”	3/4”	8 3/4”	9 5/8”
13318	-----	13 1/2”	12 5/8”	3/4”	11 1/4”	9 5/8”

Dyno-Cool Series 6000 Tube & Fin Cooler Kits

- Prevents heat-related component failure & fluid breakdown
- 1/2” aluminum tubing expanded into aluminum cooling fins
- Embossed turbulators in each tube agitate fluid for maximum heat transfer
- 11/32” hose barb inlets
- Hardware kit includes high pressure/high temperature hose, Insta-Dapt radiator adapter with plastic rod mounting
- 6 sizes available

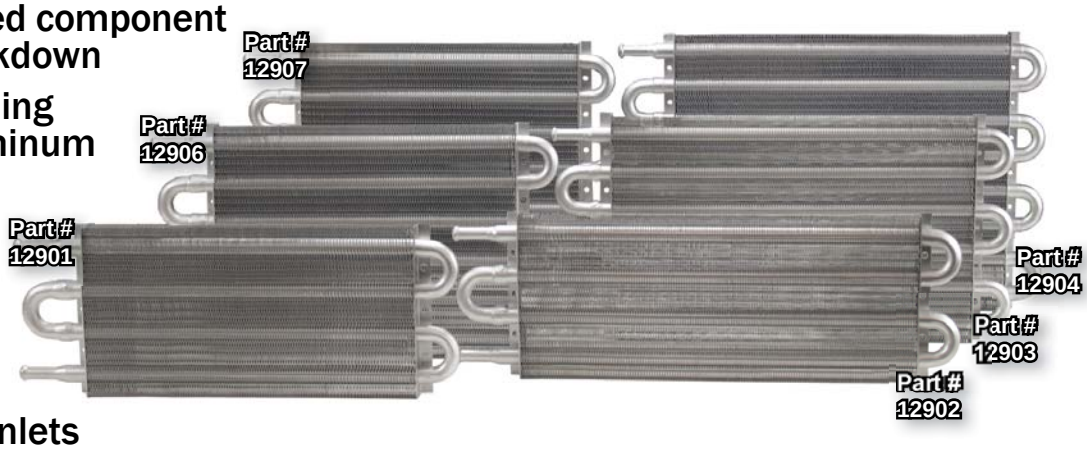

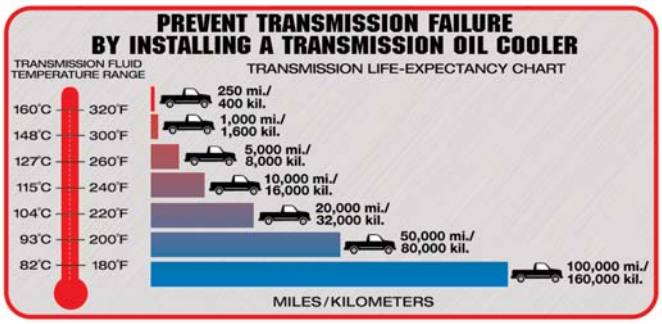

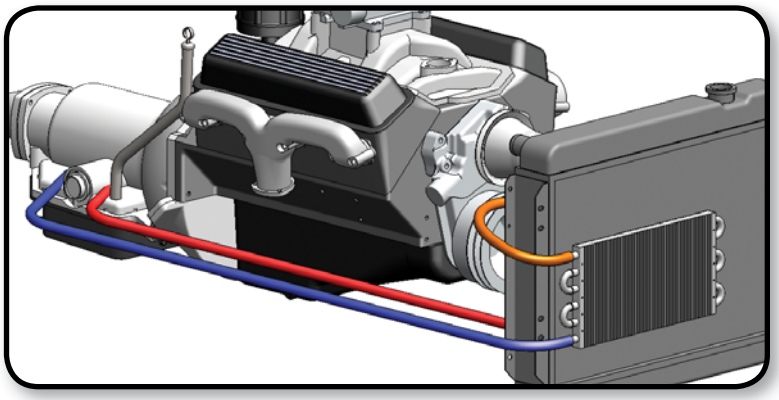

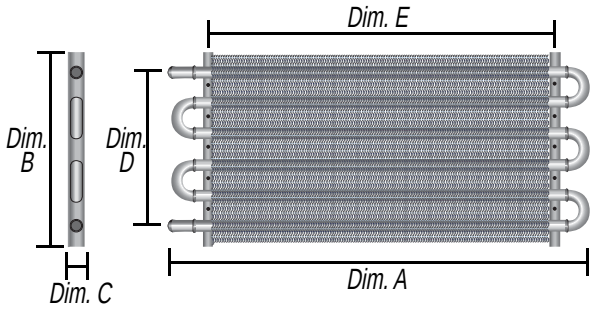

Part No.	GVW	Dim. A (Width)	Dim. B (Height)	Dim. C (Depth)	Dim. D (Inlets)	Dim. E (Mounting)
12901	12000	13”	5”	3/4”	3 3/4”	10 1/8”
12902	14000	15 1/4”	5”	3/4”	3 3/4”	12 1/4”
12903	18500	15 1/4”	7 1/2”	3/4”	6 1/4”	12 1/4”
12904	20500	15 1/4”	10”	3/4”	8 3/4”	12 1/4”
12906	15500	13”	7 1/2”	3/4”	6 1/4”	10 1/8”
12907	18200	13”	10”	3/4”	8 3/4”	10 1/8”

Transmission Cooler Kits

- Prevents heat-related component failure & fluid breakdown
- 1/2" copper tubing expanded into aluminum cooling fins
- Embossed turbulators agitate fluid for maximum heat transfer
- 11/32" hose barb inlets
- Extruded plastic cooling fin guards
- Kit includes high pressure/high temperature hose, Insta-Dapt radiator adapter & mounting hardware
- 3 sizes available

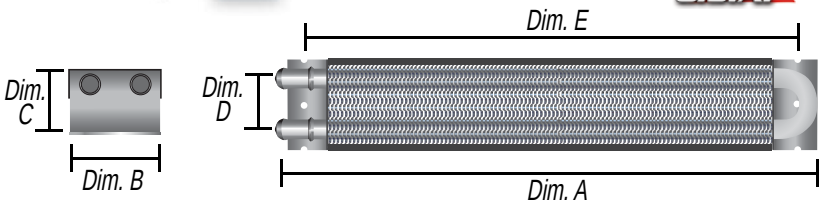

Part No.	Dim. A (Length)	Dim. B (Width)	Dim. C (Depth)	Dim. D (Inlets)	Dim. E (Mounting)
13220	16 3/4"	2 1/2"	1 3/4"	1 1/4"	15 1/2"
13222	12 3/4"	2 1/2"	1 3/4"	1 1/4"	11 3/4"
13224	23 3/4"	2 1/2"	1 3/4"	1 1/4"	22 3/4"

HARDWARE KIT

Fluid Coolers

- 1/2" copper tubing expanded into aluminum cooling fins
- Embossed turbulators agitate fluid for maximum heat transfer
- -6AN male cooler fittings
- Extruded plastic cooling fin guards
- Includes mounting hardware
- 3 sizes available

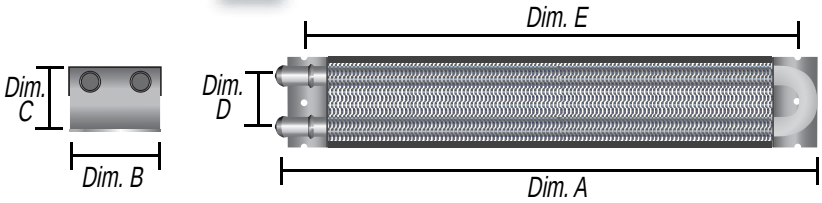

Recommended for:

Transmission
Fuel
Power Steering

MADE IN U.S.A.

Part No.	Dim. A (Length)	Dim. B (Width)	Dim. C (Depth)	Dim. D (Inlets)	Dim. E (Mounting)
13221	17 3/4"	2 1/2"	1 3/4"	1 1/4"	15 1/2"
13223	13 3/4"	2 1/2"	1 3/4"	1 1/4"	11 3/4"
13225	24 3/4"	2 1/2"	1 3/4"	1 1/4"	22 3/4"

HARDWARE KIT

HEAT SINK COOLERS

- All-aluminum heat sink design for high heat transfer
- Feature external & internal heat-dissipating fins
- Available in single & dual-pass designs
- Compact 3” diameter fits most frame rails
- Two kit options available: mounting only or with transmission cooler kit including high pressure/high temperature hose, Insta-Dapt radiator adapter, brass hose barb fittings & mounting hardware

Recommended for:

Transmission
Engine
Power Steering
Fuel
Differential

COOLER ONLY HARDWARE KIT

TRANSMISSION COOLER HARDWARE KIT

SINGLE PASS

DUAL PASS

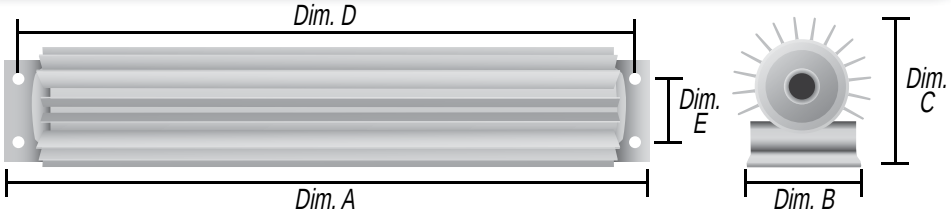

Cooler Kit Part No.	Trans. Cooler Kit Part No.	Inlet(s) Size	Dim. A (Length)	Dim. B (Width)	Dim. C (Depth)	Dim. D (Mounting)	Dim. E (Mounting)
Single Pass							
13249	**------**	3/8” NPT	10 1/4”	2 3/16”	3 1/4”	9 5/8”	1 3/8”
13250	**13253**	3/8” NPT	14 1/4”	2 3/16”	3 1/4”	13 5/8”	1 3/8”
13251	**13254**	3/8” NPT	17 1/4”	2 3/16”	3 1/4”	16 5/8”	1 3/8”
13252	**13255**	3/8” NPT	20 1/4”	2 3/16”	3 1/4”	19 5/8”	1 3/8”
13257	**13256**	3/8” NPT	26 1/4”	2 3/16”	3 1/4”	25 5/8”	1 3/8”
Dual Pass							
13260	**13263**	1/4” NPT	14 1/4”	2 3/16”	3 1/4”	13 5/8”	1 3/8”
13261	**13264**	1/4” NPT	17 1/4”	2 3/16”	3 1/4”	16 5/8”	1 3/8”
13262	**13265**	1/4” NPT	20 1/4”	2 3/16”	3 1/4”	19 5/8”	1 3/8”
13267	**13266**	1/4” NPT	26 1/4”	2 3/16”	3 1/4”	25 5/8”	1 3/8”

Tube & Fin

- Extends pump & seal life
- Reduces heat-related pump failure
- 1/2” copper tubing expanded into aluminum cooling fins
- 11/32” hose barb inlets
- Extruded plastic cooling fin guards
- Black powdercoat finish

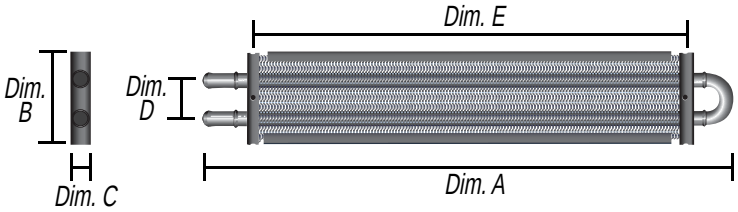

Part No.	Dim. A (Width)	Dim. B (Height)	Dim. C (Depth)	Dim. D (Inlets)	Dim. E (Mounting)
13200	12 5/8”	2 1/2”	3/4”	1 1/4”	10”
13210	8 1/8”	2 3/4”	1 7/8”	1 1/4”	5 1/4”
13212	8 1/8”	5”	3/4”	3 3/4”	5 1/4”
13213	8 1/8”	2 1/2”	3/4”	1 1/4”	5 1/4”

Dyno-Cool Aluminum Tube & Fin

- Extends pump & seal life
- Reduces heat-related pump failure
- All-aluminum cooler construction
- 11/32” hose barb inlets

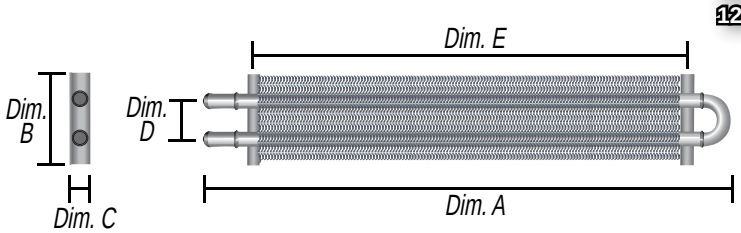

Part No.	Dim. A (Width)	Dim. B (Height)	Dim. C (Depth)	Dim. D (Inlets)	Dim. E (Mounting)
12200	12 1/4”	2 1/2”	3/4”	1 1/4”	8 3/4”
12213	9 1/8”	2 1/2”	3/4”	1 1/4”	5 7/8”

-6 AN Compact Fluid Coolers

- 1/2" copper tubing expanded into aluminum cooling fins
- -6 AN male cooler fittings
- Extruded plastic cooling fin guards
- Black powdercoat finish

NEW

MADE IN U.S.A.

Recommended for:

Transmission Fuel
Power Steering

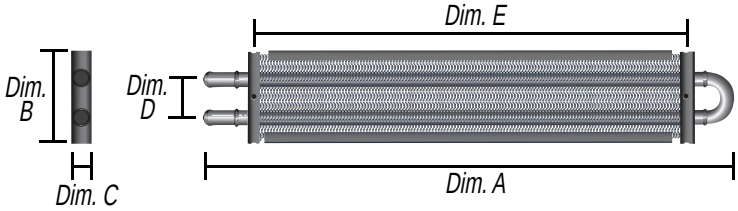

Part No.	Dim. A (Width)	Dim. B (Height)	Dim. C (Depth)	Dim. D (Inlets)	Dim. E (Mounting)
13309	8 1/8"	5"	3/4"	3 3/4"	5 1/4"
13310	8 1/8"	2 3/4"	1 7/8"	1 1/4"	5 1/4"

Fuel Filter / Water Separator Kits

- Extends carburetor/fuel injector life
- Designed for all fuel types
- Element burst pressure of 100 p.s.i.
- Improves engine performance
- Petcock allows for convenient draining of water

MADE IN U.S.A.

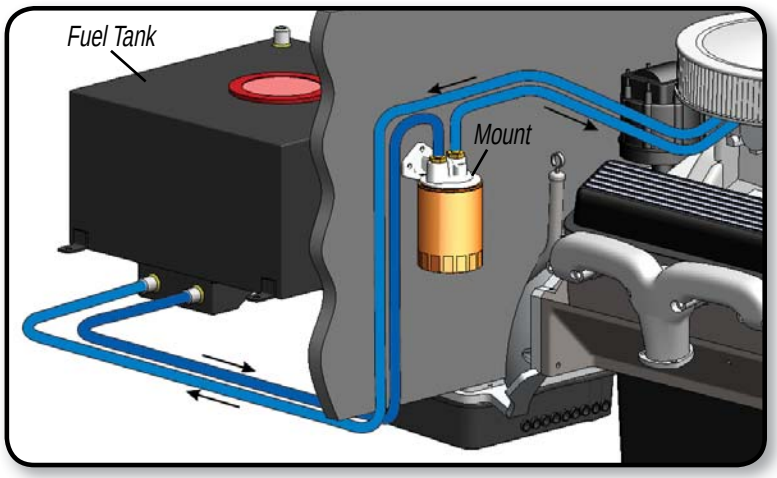

Part No.	Description	Filter Thread Size	Filter Landing	Inlet/Outlet Ports	Filter Dimensions
13070	Single Mount - Side Ports	1"-14	2 1/2",2 3/4"	1/2" NPT	3 1/2" O.D. x 7 5/8"
13072	Single Mount - Ports Up	1"-14	2 1/2",2 3/4",3 1/2"	1/2" NPT	3 1/2" O.D. x 7 5/8"
13075	Replacement Filter	1"-14	-----	-----	3 1/2" O.D. x 7 5/8"

DERALE PERFORMANCE
The Leader in Performance Cooling

TRANSMISSION COOLING PANS

- Reduces fluid temperatures
- Increases fluid capacity
- Two stage heat-dissipating black finish
- 1/8" NPT temperature sender port
- Drain plug features increased magnet strength & reusable rubber/steel washer
- Modified tube depths to fit more applications
- Includes gasket

NEW

MADE IN U.S.A.

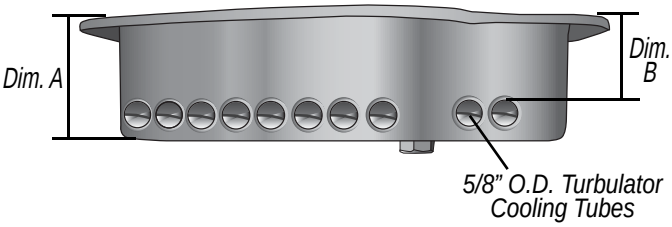

MAGNETIC DRAIN PLUG & TEMPERATURE SENDER PORT

GM TURBO 350

Fits most GM Turbo 350 1968-1986 applications

Part # 14200

GM TURBO 400

Part #14201 / 14202*

Standard - Fits most GM Turbo 400 1966-1990 applications

Deep Pan - Fits most GM Turbo 400 1978-1990 applications

Application	Part No.	Extra Fluid Capacity	Dim. A (Pan Depth)	Dim. B (Tube Depth)	Repl. Gasket
GM Turbo 350	**14200**	2 Qts.	3 1/4"	2 3/8"	**96900**
GM Turbo 400 (Standard)	**14201**	3 Qts. 8 Oz.	2 7/8"	2"	**96901**
GM Turbo 400 (Deep)	**14202***	Deep OE pan to Deep pan - 1 Qt. 3 Oz. Stnd. OE pan to Deep pan - 3 Qts. 8 Oz.	4"	3 1/16"	**96901**

** Part No. 14202 includes Filter Pickup Tube Part #14002 (See page 41).*
(Necessary when replacing a standard depth pan with a deep transmission pan.)

TRANSMISSION COOLING PANS

GM 700R4 & 4L60E

Fits most GM 700R4 & 4L60E 1982-1999 applications

Part # 14204

GM 4L80E

Fits most GM 4L80E 1991-2008 applications

Part # 14207

FORD E4OD, 4R100, 5R110 & 5R110W

Fits most Ford E4OD, 4R100, 5R110 & 5R110W 1989-2010 applications

NEW

Part # 14208

DODGE / CHRYSLER

Fits most Dodge/Chrysler
A518 (46RH, 46RE)
A618 (47RH, 47RE, 48RE)
A727 (36RH, 37RH)

Part # 14210

Application	Part No.	Extra Capacity	Dim. A (Pan Depth)	Dim. B (Tube Depth)	Repl. Gasket
GM 700R4, 4L60E	**14204**	2 Qts. 4 Oz.	3 5/8”	2 1/2”	**96906**
GM 4L80E	**14207**	4 Qts. 16 Oz.	4 1/16”	2 3/4”	**96909**
Ford E4OD, 4R100, 5R110 & 5R110W	**14208**	4R100 - 7 Qts. 30 Oz. 5R110 - 7 Qts. 10 Oz.	6 1/8”	4 3/8”	**96908**
Dodge A518 (46RH, 46RE) A618 (47RH, 47RE, 48RE) A727 (36RH, 37RH)	**14210**	Up to 5 Qts. 16 Oz.	4 1/2”	3 5/8”	**96905**

Transmission Cooling Pan Accessories

FILTER PICKUP TUBE

Application:
GM TH400 deep pan

- Extends filter for use on deep transmission pans

Part # 14002*

DEEP PAN FILTER EXTENDER

Application: Dodge A518 (46RH, 46RE) A618 (47RH, 47RE, 48RE) A727 (36RH, 37RH)

- Extends filter for use on deep transmission pans

Part # 14010

UNIVERSAL DRAIN PLUG KIT

- 1/8” NPT Plug
- Perfect for temp. sending units

Part # 13010

MAGNETIC DRAIN PLUG KIT

- 1/2”-20 Threads
- Increased magnet strength
- Rubber/steel washer

Part # 14000

TRANSMISSION FILTER KITS

- Extends life of transmission
- Filters out contaminants more efficiently than OE screen-type filters
- New cast aluminum design with bright finish
- Increases fluid capacity for added cooling
- Universal – fits all automatic transmissions
- Available in Standard and Premium Kit form
- Standard kit - includes filter, filter mount, oil hose & mounting hardware
- Premium kit - includes filter, filter mount, premium temperature gauge kit, oil hose & mounting hardware

Standard Kit

MADE IN U.S.A.

Part # 13090

Premium Kit

Part # 13091

Filter Information

- New more compact shell design reduces weight
- New gasket more pliable and uses taller profile for improved seating and filter sealing
- 7% more efficient than older, larger unit
- High strength nylon core increased collapse pressure from 75 p.s.i.d. to 115 p.s.i.d.
- Burst pressure increases from 235 p.s.i. to 350 p.s.i.
- Patented pressure relief and anti-drain back valve delivers oil in cold start and clogged environments
- Meets or exceeds OE requirements

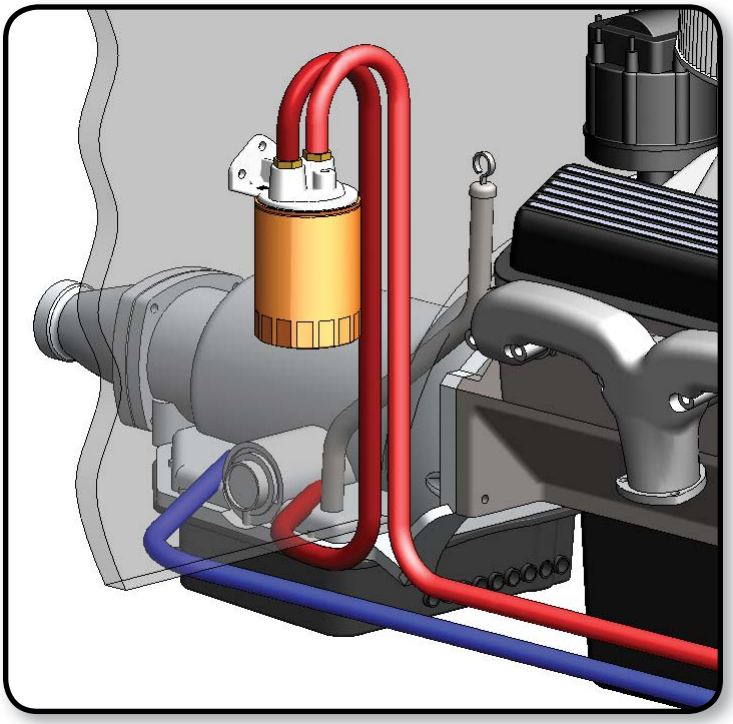

Part No.	Description	Filter Thread Size	Filter Landing	Inlet/Outlet Ports	Filter Dimensions
13090	Standard kit	3/4”-16	2 1/2”,2 3/4”,3 1/2”	3/8” NPT	3 1/2” O.D. x 3 1/8”
13091	Premium Kit	3/4”-16	2 1/2”,2 3/4”,3 1/2”	3/8” NPT	3 1/2” O.D. x 3 1/8”
13092	Replacement Filter	3/4”-16	-----	-----	3 1/2” O.D. x 3 1/8”

ENGINE ADAPTER QUICK REFERENCE

Year	Engine	Liters	Filter Thread Size	Filter O-ring Size	Engine Spin-on Adapter Type	Engine Sandwich Adapter Type
DODGE / CHRYSLER					Pg. 46, 47 & 49	Pg. 44 & 45
1968-2000	**L/4,L/6, V-6,V-8**	1.6, 1.7, 2.0, 2.2, 2.4, 2.5, 2.8, 3.0, 3.2, 3.7, 3.8, 5.2, 5.6, 5.9, 6.3, 6.6, 7.0	3/4”-16	2 3/4”	**E, J, K**	**A, B, D, E, K**
1971-1990	**L/4,V-6**	1.5, 1.6, 1.8, 2.0, 2.2, 2.4, 2.5, 3.0	20 x 1.5mm	2 3/4”	**J, M**	**A, B, D, G, M**
1982-1989	**L/4,V-6**	1.5, 1.8, 3.0, 3.8	20 x 1.5mm	2 1/2”	**J, M**	**D, M**
FORD						
1965-2007	**L/4,L/6, V-6,V-8**	2.0, 2.3, 2.5, 2.8, 2.9, 3.8, 3.9, 4.0, 4.2, 4.9, 4.7, 5.0, 5.8, 5.9, 6.4, 6.6, 7.5	3/4”-16	2 3/4”	**E, J, K**	**A, B, D, E, K**
1979-2008	**V-6,V-8,V-10**	4.0, 4.6, 5.0, 5.4, 5.8, 6.8	22 x 1.5mm	2 3/4”	**J, O**	**A, B, D, I, O**
1984-1987	**L/4**	2.0	20 x 1.5mm	2 3/4”	**J, M**	**A, B, D, G, M**
1991-1996	**L/4**	1.8, 2.0, 2.2	20 x 1.5mm	2 1/2”	**J, M**	**D, M**
GM						
1963-2007	**L/4,L/6,V-6,V-8**	2.3, 3.8, 4.1, 4.3, 4.4, 5.0, 5.7, 6.5, 6.6, 7.4	13/16”-16	3 1/2”	**J, L**	**A, F, C**
1968-2008	**L/4, L/6, V-6,V-8**	2.4, 3.6, 3.8, 3.9, 4.2, 4.3, 4.6, 4.9, 5.0, 5.7, 6.6, 7.0, 7.5	13/16”-16	2 3/4”	**J, L**	**A, B, F**
1972-1985	**L/4**	1.8, 1.9	20 x 1.5mm	2 1/2”	**J, M**	**D, M**
1982-2007	**L/4,V-6, V-8**	2.2, 2.3, 2.5, 2.8, 3.1, 3.2, 3.3, 3.4, 3.5, 3.8, 4.1, 4.3	18 x 1.5mm	2 3/4”	**J, N**	**A, B, D, H, N**
2007-2008	**V-8**	5.3, 6.0, 6.2	22 x 1.5mm	2 3/4”	**J, O**	**A, B, D, I, O**
HONDA / ACURA						
1979-2008	**L4,L/5,V-6**	1.6, 1.7, 1.8, 2.0, 2.1, 2.3, 2.4, 2.5, 2.6, 2.7, 3.0, 3.2, 3.5	20 x 1.5mm	2 1/2”	**J, M**	**D, M**
ISUZU						
1981-1987	**L/4,L/6,V-8**	1.8, 1.9, 2.3	20 x 1.5mm	2 3/4”	**J, M**	**A, B, D, G, M**
1985-2004	**L/4,V-6**	1.5, 1.6, 1.8, 1.9, 2.3, 3.2, 3.5	20 x 1.5mm	2 1/2”	**J, M**	**D, M**
1996-2003	**L/4,V-6**	2.2, 2.8, 3.1, 4.3	18 x 1.5mm	2 3/4”	**J, N**	**A, B, D, H, N**
JEEP						
1965-2007	**L/4,L/6,V-6,V-8**	3.7, 4.0, 4.7, 5.2, 5.9	3/4”-16	2 3/4”	**E, J, K**	**A, B, D, E, K**
1987-1990	**L/4,L/6,V-8**	2.5, 4.0, 4.2, 5.9	20 x 1.5mm	2 3/4”	**J, M**	**A, B, D, G, M**
MAZDA						
1978-2006	**L/4,V-6**	1.3, 1.5, 1.6, 1.8, 2.0, 2.2, 2.3, 2.5, 2.6, 3.0	20 x 1.5mm	2 1/2”	**J, M**	**D, M**
1991-2007	**L/4,V-6**	2.2, 2.3, 2.5, 3.0, 4.0	3/4”-16	2 3/4”	**E, J, K**	**A, B, D, E, K**
MITSUBISHI						
1985-2001	**L/4**	1.6, 1.8, 2.0, 2.4, 2.6	20 x 1.5mm	2 3/4”	**J, M**	**A, B, D, G, M**
1985-2008	**L/4,V-6**	1.5, 1.8, 2.0, 2.4,	20 x 1.5mm	2 1/2”	**J, M**	**D, M**
NISSAN						
1991-2008	**L/4,V-6**	1.8, 2.5, 3.0, 3.3, 3.5, 4.0, 5.6	20 x 1.5mm	2 1/2”	**J, M**	**D, M**
SUBARU						
1987-2008	**L/3,H/4,H/6**	1.2, 1.8, 2.2, 2.5, 3.0, 3.3, 3.6	20 x 1.5mm	2 1/2”	**J, M**	**D, M**
TOYOTA						
1975-2008	**L/4,L/6, V-6,V-8**	1.2, 1.3, 1.6, 1.8, 1.9, 2.0, 2.2, 2.4, 2.6, 2.7, 2.8, 3.0, 3.3, 3.4, 4.0, 4.2, 4.5, 4.7	3/4”-16	2 3/4”	**E, J, K**	**A, B, D, E, K**
1980-2008	**L/4**	1.5, 1.6, 1.8, 2.0, 2.2, 2.4	3/4”-16	2 1/2”	**E, J, K**	**D, K**
VW						
1978-2007	**L/4,V-6**	1.5, 1.6, 1.7, 1.8, 2.0, 2.2, 2.5	3/4”-16	2 3/4”	**E, J, K**	**A, B, D, E, K**

Sandwich Adapter Kits

- Can reduce oil temperature up to 50°F
- Helps reduce coolant temperature
- Extends engine life
- Offered in 3 cooler styles to fit any application
- Complete hardware kit included

An engine's coolant system cools the top end of an engine; the lower end depends on oil for both lubrication and cooling. Derale engine oil coolers are an excellent, cost-effective method of extending engine life, maintaining oil viscosity, and helping maintain factory tolerances of mating surfaces. They can reduce the heat-exchanging requirements of a radiator, fan and coolant system by lowering coolant temperatures up to 15°F or more.

See Engine Oil Quick Reference Guide on page 43 for specific applications.

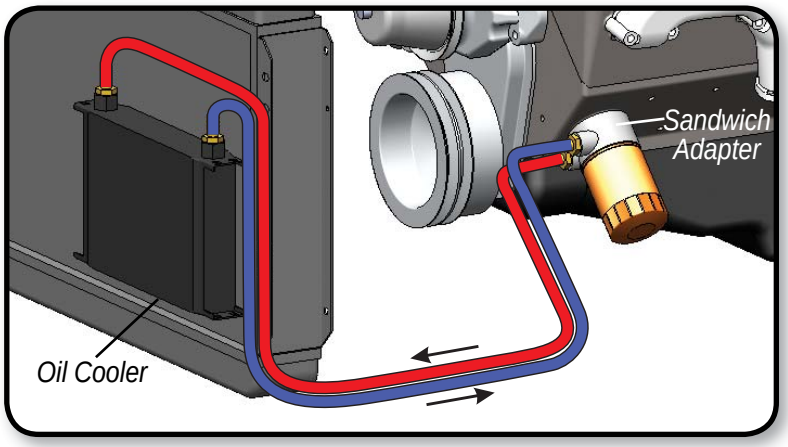

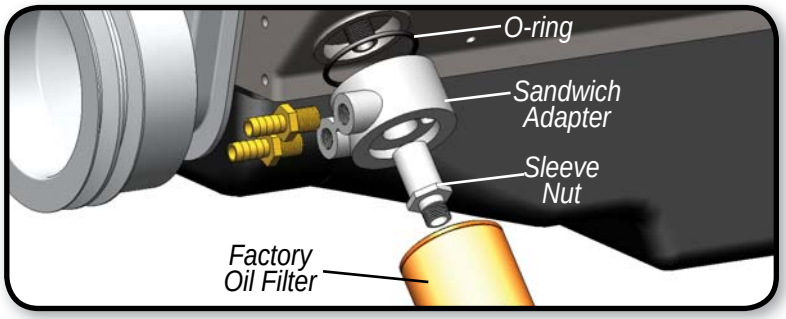

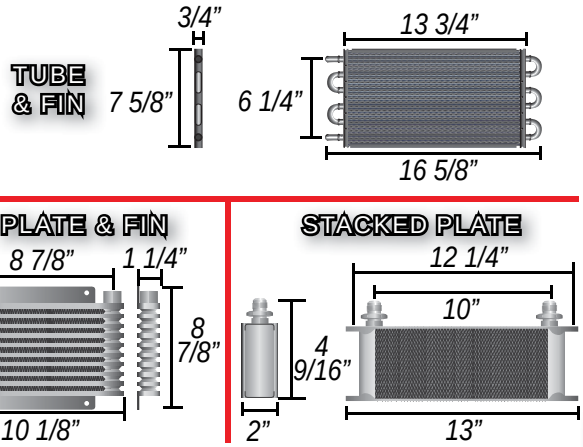

Part No.	Repl. Cooler	Application
Tube & Fin		
15505	15302	Type A
15502		Type B
15503		Type C
Plate & Fin		
15405	15851	Type A
Stacked Plate		
15605	51008	Type A
15602		Type B
15603		Type C
15604		Type D

TYPE A HARDWARE KIT

TYPE B HARDWARE KIT

TYPE C HARDWARE KIT

TYPE D HARDWARE KIT

For vehicle specific applications see application guide or visit www.derale.com

ENGINE SANDWICH ADAPTERS

The purpose of a Sandwich Adapter is to provide external oil lines for oil coolers without relocating the factory oil filter.

- **Cast from high quality aluminum**
- **Four designs to fit most applications**
- **Maintains factory equivalent oil filter**

MADE IN U.S.A.

Custom applications available

See Engine Adapter Quick Reference Guide on page 43 for specific applications

Kit Part No. - Includes sandwich adapter, sleeve nut(s) & O-ring(s)

Complete Kit Part No. - Includes brass fittings, sandwich adapter, sleeve nut(s) & O-ring(s)

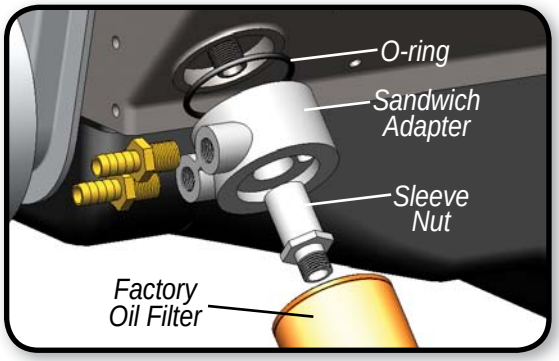

Thermostatic

Thermostatic (GM Applications)

Low Profile

Non-Thermostatic

Complete Kit Part No.	Kit Part No.	Application	Engine Thread Sizes	O-ring Dia.	Thickness	Ports
Thermostatic						
15702	**25702**	**Type B**	3/4”-16, 13/16”-16, 18x1.5mm, 20x1.5mm, 22x1.5mm	2 3/4”	1 3/4”	3/8” NPT
15782	**25782**	**Type A**		2 3/4”, 3 1/2”	1 3/4” or 2 1/8”	3/8” NPT
15730	**25730**	**Type E**	3/4”-16	2 3/4”	1 3/4”	3/8” NPT
15731	**25731**	**Type F**	13/16”-16	2 3/4”, 3 1/2”	1 3/4” or 2 1/8”	3/8” NPT
15732	**25732**	**Type G**	20 x 1.5mm	2 3/4”	1 3/4”	3/8” NPT
15733	**25733**	**Type H**	18 x 1.5mm	2 3/4”	1 3/4”	3/8” NPT
15734	**25734**	**Type I**	22 x 1.5mm	2 3/4”	1 3/4”	3/8” NPT
Thermostatic (GM Applications Only)						
15720	**25720**	**Type C**	13/16”-16	3 1/2”	2 1/4”	1/2” NPT
Non-Thermostatic						
15735	**-----**	**Type D**	3/4”-16, 13/16”-16, 18x1.5mm, 20x1.5mm, 22x1.5mm	2 1/2”, 2 3/4”	1 3/4”	1/2” NPT
Low Profile with pressure relief						
-----	**25770**	**Type K**	3/4”-16	2 1/2”, 2 3/4”	1”	3/8” NPT
-----	**25771**	**Type L**	13/16”-16	2 1/2”, 2 3/4”	1”	3/8” NPT
-----	**25772**	**Type M**	20 x 1.5mm	2 1/2”, 2 3/4”	1”	3/8” NPT
-----	**25773**	**Type N**	18 x 1.5mm	2 1/2”, 2 3/4”	1”	3/8” NPT
-----	**25774**	**Type O**	22 x 1.5mm	2 1/2”, 2 3/4”	1”	3/8” NPT
-----	**25783**	**Type D**	3/4”-16, 13/16”-16, 18x1.5mm, 20x1.5mm, 22x1.5mm	2 1/2”, 2 3/4”	1”	3/8” NPT

For vehicle specific applications see application guide or visit www.derale.com

Spin-On Adapter Kits

- Can reduce oil temperature up to 50°F
- Helps reduce coolant temperature
- Extends engine life
- Includes ports-up filter mount (Fram PH8A equivalent filters)
- Offered in 3 cooler styles to fit any application
- Complete hardware kit included

An engine's coolant system cools the top end of an engine; the lower end depends on oil for both lubrication and cooling. Derale engine oil coolers are an excellent, cost-effective method of extending engine life, maintaining oil viscosity, and helping maintain factory tolerances of mating surfaces. They can reduce the heat-exchanging requirements of a radiator, fan and coolant system by lowering coolant temperatures up to 15°F or more.

See Engine Oil Quick Reference Guide on page 43 for specific applications.

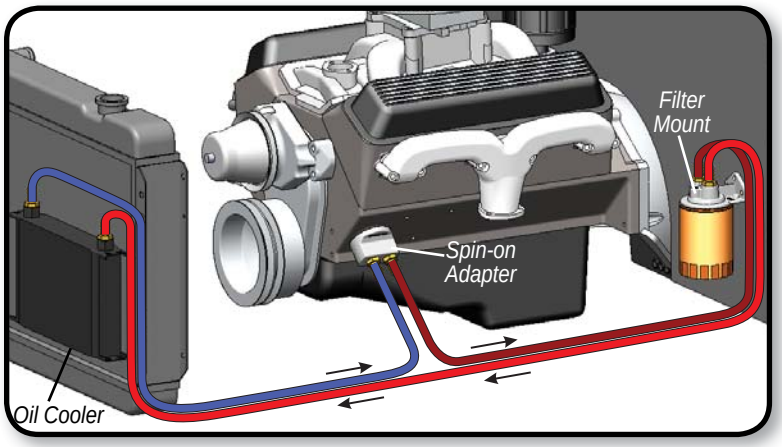

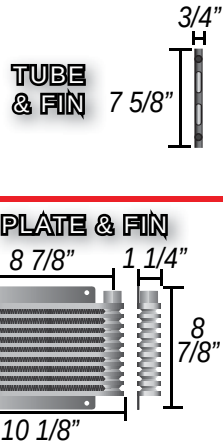

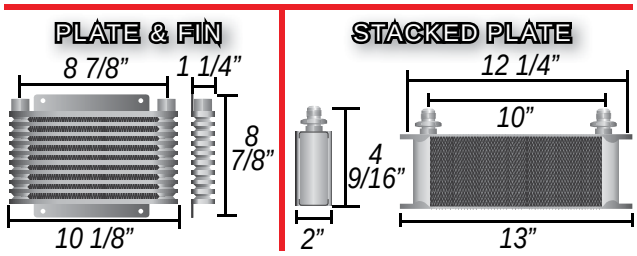

Part No.	Repl. Cooler	Application
Tube & Fin		
15551	15302	Type J
Plate & Fin		
15451	15851	Type J
Stacked Plate		
15651	51008	Type J

For vehicle specific applications see application guide or visit www.derale.com

ENGINE SPIN-ON ADAPTERS

The purpose of a Spin-on Adapter is to provide external oil lines for remote filter mounts and oil coolers.

See Engine Adapter Quick Reference Guide on page 43 for specific applications

Custom applications available

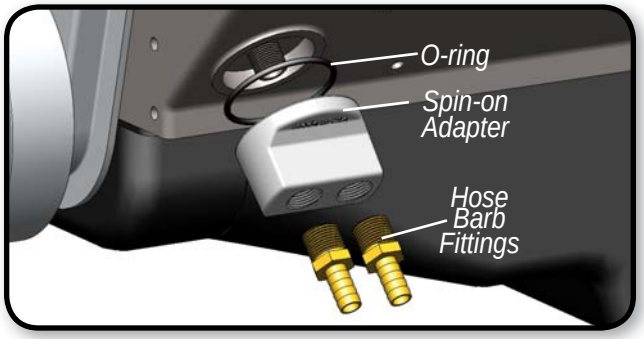

Dual Side Ports

MADE IN U.S.A.

Part No.	Application	Thread Size	O-ring Dia.	Ports
15746	**Type K**	3/4”-16	2 1/2”, 2 3/4”	1/2” NPT

Standard Series

- Ultra bright finish
- New Billet-style design
- Available in 6 numbers to fit all applications
- 1/2” NPT ports

Premium Series

- Black powdercoated finish
- New Billet-style design
- Available in 6 numbers to fit all applications
- -10 AN / 7/8”-14 O-ring ports

Standard Series Part No.	Ports	Premium Series Part No.	Ports	Application	Engine Thread Sizes	O-ring Dia.
15747	1/2” NPT	**35747**	-10 AN O-ring	**Type J**	3/4”-16, 13/16”-16, 18x1.5mm, 20x1.5mm, 22x1.5mm	2 1/2”,2 3/4”,3 1/2”
15703	1/2” NPT	**35703**	-10 AN O-ring	**Type K**	3/4”-16	2 1/2”,2 3/4”
15704	1/2” NPT	**35704**	-10 AN O-ring	**Type N**	18 x 1.5mm	2 1/2”,2 3/4”
15705	1/2” NPT	**35705**	-10 AN O-ring	**Type L**	13/16”-16	2 1/2”,2 3/4”,3 1/2”
15706	1/2” NPT	**35706**	-10 AN O-ring	**Type M**	20 x 1.5mm	2 1/2”,2 3/4”
15724	1/2” NPT	**35724**	-10 AN O-ring	**Type O**	22 x 1.5mm	2 1/2”,2 3/4”

For vehicle specific applications see application guide or visit www.derale.com

GM V8 - Bolt-on Engine Oil Filter Adapter

- Fits all 1956-1967 SB & BB V8's with canister style oil filter
- Allows factory oil filter to be moved to a remote location
- Bolts directly to engine block replacing factory oil bypass
- Finned aluminum design with 1/2" NPT ports
- Cast from high quality aluminum
- Complete hardware kit and illustrated instructions included

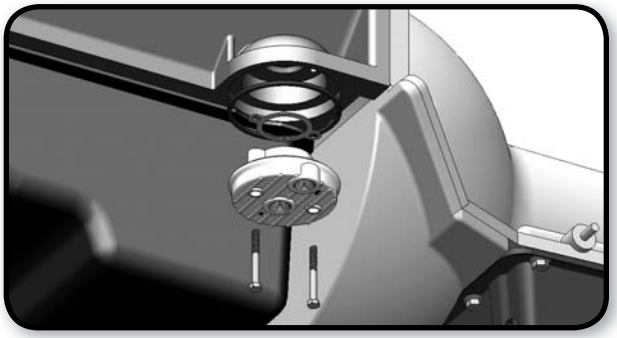

Mount Part No.	Inlet/Outlet Ports
15760	1/2" NPT
98004	Replacement O-ring and gasket

GM V8 - Canister To Spin-on Oil Filter Adapter

- Fits all 1956-1967 SB & BB V8's (except Chevy II) with canister style oil filter
- Converts factory canister style oil filter to a spin-on type oil filter
- Requires factory GM oil bypass
- Cast from high quality aluminum
- Complete hardware kit and illustrated instructions included
- Uses Fram PH5, PH30 or equivalent oil filters

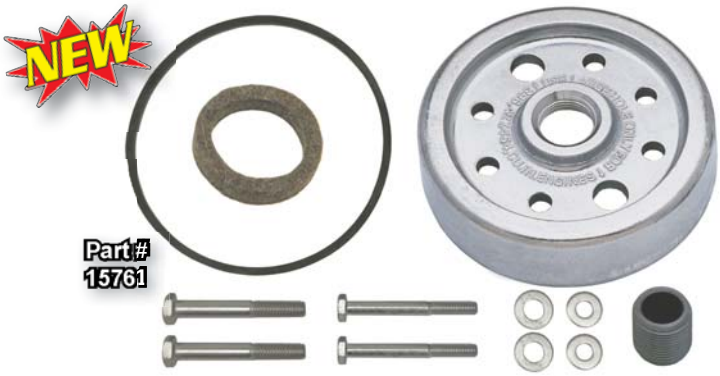

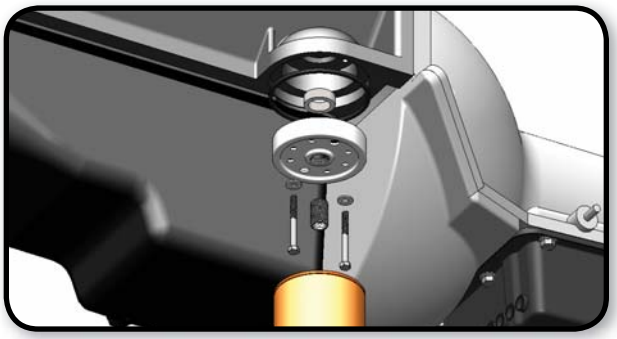

Mount Part No.	Filter Threads	Filter Landing
15761	13/16"-16	3 1/2"
98003	Replacement O-ring and gasket	

ENGINE OIL FILTER RELOCATION KITS

- Allows oil filter to be moved to a more convenient location
- Faster and easier filter changes
- Ideal for engine swaps
- Increases oil capacity
- Available in single & dual filter mounts
- Cast from high quality aluminum
- 10' length of 1/2" OEM-spec hose included
- Filter mount uses Fram PH8A or equivalent
- Complete hardware kit included

MADE IN U.S.A.

Custom applications available

See Engine Adapter Quick Reference Guide on page 43 for specific applications

Single Mount - Ports Up

Part # 15715

Single Mount - Ports Up Universal

Part # 15748

Dual Mount - Side Ports Universal

Part # 15749

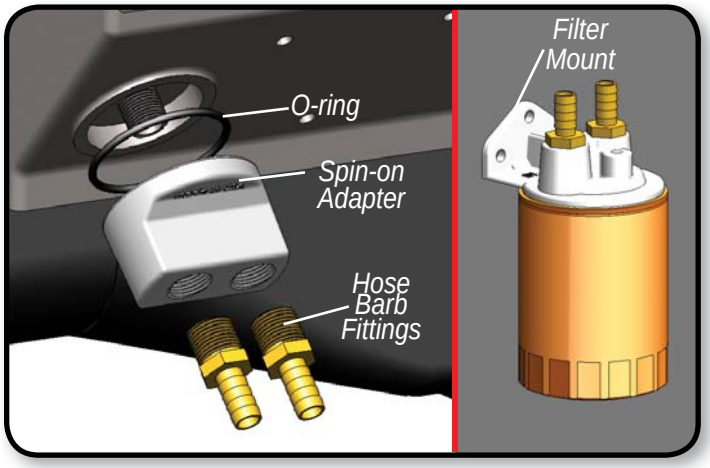

Kit Part No.	Application	Engine Thread Size	Filter Thread Size	Filter Landing	Inlet/Outlet Ports
Single Mount - Ports Up					
15715	**Type K**	3/4"-16	3/4"-16	2 1/2",2 3/4"	1/2" NPT
15716	**Type L**	13/16"-16	3/4"-16	2 1/2",2 3/4",3 1/2"	1/2" NPT
15717	**Type N**	18 x 1.5mm	3/4"-16	2 1/2",2 3/4"	1/2" NPT
15718	**Type M**	20 x 1.5mm	3/4"-16	2 1/2",2 3/4"	1/2" NPT
15725	**Type O**	22 x 1.5mm	3/4"-16	2 1/2",2 3/4"	1/2" NPT
15748	**Type J**	3/4"-16, 13/16"-16, 18x1.5mm, 20x1.5mm, 22x1.5mm	3/4"-16	2 1/2",2 3/4",3 1/2"	1/2" NPT
Dual Mount - Side Ports					
15749	**Type J**	3/4"-16, 13/16"-16, 18x1.5mm, 20x1.5mm, 22x1.5mm	3/4"-16	2 1/2",2 3/4",3 1/2"	1/2" NPT

For vehicle specific applications see application guide or visit www.derale.com

Filter Mounts - Standard Series

- Allows oil filter to be remote mounted anywhere
- Available in single or dual filter configurations
- Offered with or without hardware kit
- Cast from high quality aluminum
- 3 bolt heavy duty mounting plate

Individual fittings and accessories available on pages 53

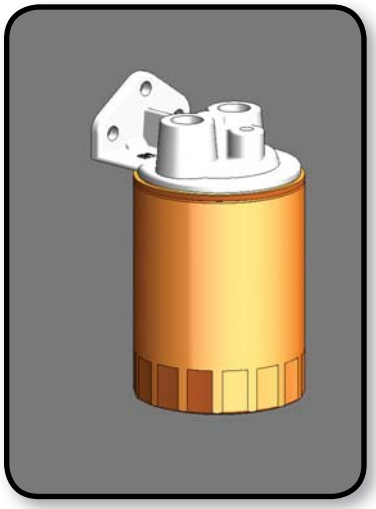

KIT HARDWARE

MOUNT HARDWARE

Single Mount - Ports Up

MADE IN U.S.A.

Kit Part No.	Mount Part No.	Filter Threads	Inlet/Outlet Ports
13005	25005	3/4”-16	3/8” NPT
15708	25708	3/4”-16	1/2” NPT
15728	25728	13/16”-16	1/2” NPT

Single Mount - Side Ports

MADE IN U.S.A.

Kit Part No.	Mount Part No.	Filter Threads	Inlet/Outlet Ports
15709	25709	3/4”-16	1/2” NPT

Dual Mount - Side Ports

MADE IN U.S.A.

Kit Part No.	Mount Part No.	Filter Threads	Inlet/Outlet Ports
15707	25707	3/4”-16	1/2” NPT

Single Mounts - Left or Right

Mount Part No.	Ports	Filter Threads	Inlet/Outlet Ports
25750	Left	3/4”-16	3/8” NPT
25751	Right	3/4”-16	3/8” NPT

Premium Series - Single Filter Mounts

- Cast aluminum Billet-look
- Can be rotated 180°F to reverse flow direction
- Designed to fit 2 1/2” to 3 1/2” oil filter landings
- Removable 3 hole mounting bracket
- Black powdercoated finish
- -10 AN / 7/8”-14 O-ring ports

MADE IN U.S.A.

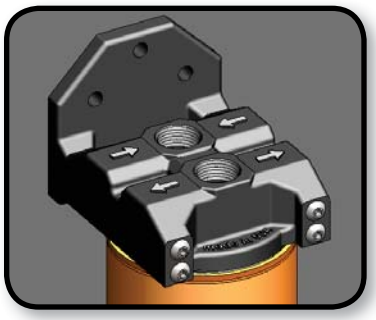

Recommended for:
Engine
Transmission
Fuel

Ports Up

Part # 35708

Side Ports

Part # 35709

Ports Up Part No.	Side Ports Part No.	Filter Thread Size	Filter Landing	Inlet/Outlet Ports
35708	**35709**	3/4”-16	2 1/2”,2 3/4” or 3 1/2”	-10 AN / 7/8”-14 O-ring
35728	**35729**	13/16”-16	2 1/2”,2 3/4” or 3 1/2”	-10 AN / 7/8”-14 O-ring

Premium Series - Dual Filter Mounts

- Absolute dual filtration system
- Removable 3 hole mounting bracket
- Black powdercoated finish
- -10 AN / 7/8”-14 O-ring ports

MADE IN U.S.A.

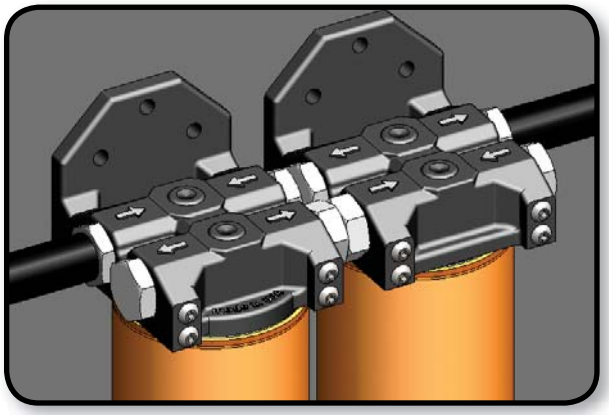

Part # 35707

Part No.	Filter Threads	Filter Landing	Inlet/Outlet Ports
35707	3/4”-16	2 1/2”,2 3/4” or 3 1/2”	-10 AN / 7/8”-14 O-ring
35727	13/16”-16	2 1/2”,2 3/4” or 3 1/2”	-10 AN / 7/8”-14 O-ring

FLUID CONTROL THERMOSTATS

- Fluid bypasses cooler until 180°F
- Perfect for all-season climates
- Provides quicker warm-ups for more efficient lubrication
- Can be reversed to switch flow direction
- Flows up to 20 gpm (gallons per minute)
- Rated to 200 p.s.i.
- Ultra-bright, polished-look finish
- Available in 3/8" or 1/2" NPT ports

MADE IN U.S.A.

Recommended for:

Transmissions **Engines**

As the fluid temperatures exceed 180°F the thermostatic valve closes, allowing 95% flow through the oil cooler. At temps. below 180°F the valve is open, with 90% of the oil bypassing the cooler. The remaining 10% of the oil flows through the cooler, maintaining constant system pressure, preventing air pockets and eliminating cold oil shock.

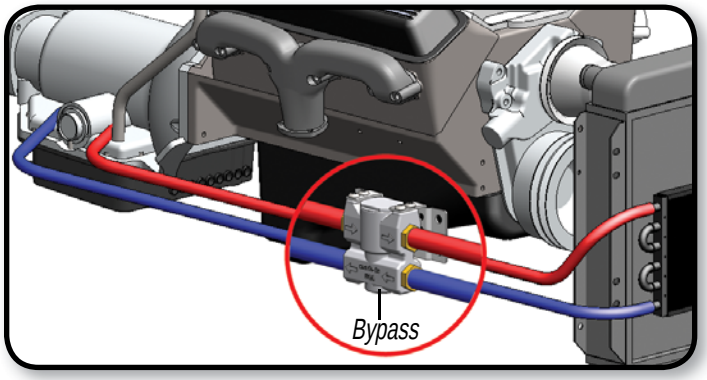

Part No.	Inlet / Outlet Ports	Fittings
Thermostat		
25011	3/8" NPT	Not Included
25719	1/2" NPT	Not Included
Thermostat With Brass Fittings		
13011	3/8" NPT	(4) 3/8" NPT x 3/8" Hose Barb
15719	1/2" NPT	(4) 1/2" NPT x 1/2" Hose Barb
Thermostat With Bracket Kit		
25791	3/8" NPT	Not Included
25792	1/2" NPT	Not Included
Accessories		
13026	Installation Kit w/ 3/8" NPT x 3/8" Hose Barb	
15726	Installation Kit w/ 1/2" NPT x 1/2" Hose Barb	
25793	Bracket & Mounting Hardware only	

Thermostat

Part # 25719

Thermostat With Brass Fittings

Part # 13011

Thermostat With Bracket Kit

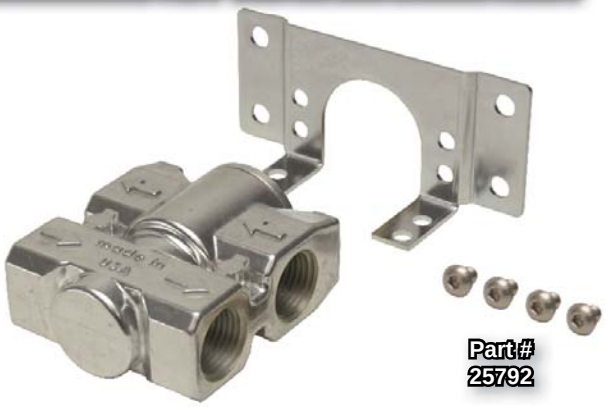

Part # 25792

Accessories

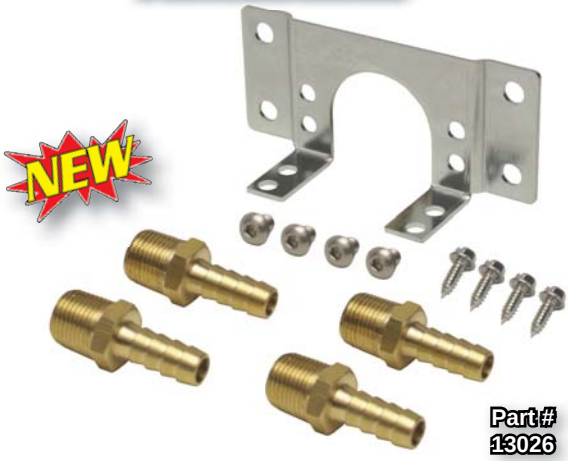

Part # 13026

FITTINGS & ACCESSORIES

STRAIGHT NPT HOSE BARB FITTINGS

Part No.	Description	U/M
98100	1/4" NPT Male x 3/8" Barb	Ea.
98101	3/8" NPT Male x 3/8" Barb	Ea.
98102	3/8" NPT Male x 1/2" Barb	Ea.
98103	1/2" NPT Male x 1/2" Barb	Ea.
98104	1/4" Female x 3/8" Barb	Ea.
98105	3/8" Female x 3/8" Barb	Ea.
98106	1/2" Female x 1/2" Barb	Ea.

Part # 98101

Part # 98104

AN SWIVEL HOSE BARB FITTINGS

Part No.	Description	U/M
98200	-6 AN Female x 3/8" Barb	Ea.
98201	-8 AN Female x 3/8" Barb	Ea.
98202	-8 AN Female x 1/2" Barb	Ea.
98203	-10 AN Female x 1/2" Barb	Ea.

Part # 98200

Part # 98201

AN HOSE BARB FITTINGS

Part No.	Description	U/M
98204	-6 AN Male x 3/8" Barb	Ea.
98205	-8 AN Male x 1/2" Barb	Ea.

Part # 98204

NPT REDUCER BUSHINGS

Part No.	Description	U/M
98450	3/8" Male x 1/8" Female	Ea.
98451	1/2" Male x 1/8" Female	Ea.
98452	1/2" Male x 3/8" Female	Ea.

Part # 98450

NPT PLUGS

Part No.	Description	U/M
98400	1/2" NPT	Ea.
98410	1/8" NPT	Ea.

Part # 98400

Part # 98410
NEW

90° HOSE BARB FITTINGS

Part No.	Description	U/M
98233	3/8" NPT Male x 3/8" Barb	Ea.
98234	3/8" NPT Male x 1/2" Barb	Ea.
98244	1/2" NPT Male x 1/2" Barb	Ea.

Part # 98234
NEW

90° NPT FITTINGS

Part # 98344
NEW

Part No.	Description	U/M
98333	3/8" NPT Female x 3/8" NPT Male	Ea.
98344	1/2" NPT Female x 1/2" NPT Male	Ea.

BARB TO BARB FITTINGS

Part No.	Description	U/M
98028	3/8" Barb x 3/8" Barb	Ea.

Part # 98028
NEW

ALUMINUM WELD BUNGS

- 6061-T6 Aluminum

Part # 98001

Part # 98002

NEW

Part No.	Description	U/M
98001	1/2" NPT	Ea.
98002	3/8" NPT	Ea.

TEFLON TAPE

Part No.	Description	U/M
15714	1/2" x 43'	Ea.

FITTINGS, HOSE & ACCESSORIES

AN ALUMINUM ADAPTER FITTINGS

- 6061-T6 Aluminum
- Bright anodized finish

MADE IN U.S.A.

Part # 59106

Part # 59008

Part No.	Description	U/M
59106	-6 AN x 5/8”-18 O-ring	Ea.
59108	-8 AN x 5/8”-18 O-ring	Ea.
59006	-6 AN x -10 AN O-ring	Ea.
59008	-8 AN x -10 AN O-ring	Ea.
59010	-10 AN x -10 AN O-ring	Ea.
59012	-12 AN x -10 AN O-ring	Ea.

ALUMINUM AN PLUG

- 6061-T6 Aluminum
- Bright anodized finish

MADE IN U.S.A.

Part # 35798

Part No.	Description	U/M
35798	-10 AN O-ring	Ea.

-10 AN ALUMINUM COUPLER FITTING

- 6061-T6 Aluminum
- Bright anodized finish

MADE IN U.S.A.

Part # 35799

Part No.	Description	U/M
35799	-10 AN O-ring x -10 AN O-ring	Ea.

AN ALUMINUM SWIVEL FITTINGS
WITH 1/8” NPT SIDE PORT

- 6061-T6 Aluminum
- Blue anodized finish

MADE IN U.S.A.

Part # 35921

Part No.	Description	U/M
35920	-6 AN Male x -6 AN Female	Ea.
35921	-8 AN Male x -8 AN Female	Ea.
35922	-10 AN Male x -10 AN Female	Ea.

FILTER NIPPLES

- High strength steel

Part # 98020

Part No.	Description	U/M
98020	3/4”-16	Ea.
98021	13/16”-16	Ea.

MADE IN U.S.A.

UNIVERSAL DRAIN PLUG KIT

- 1/8” NPT Plug
- Perfect for temperature sending units

MADE IN U.S.A.

Part No.	13010

OIL TEMPERATURE GAUGE

- Transmission or Engine oil temperature
- 2-5/8” diameter electric gauge includes mounting bracket, 1/8” NPT sensor and transmission pan adapter/drain plug to mount sensor in pan

Part No.	13009

STAINLESS HOSE CLAMPS

- Universal hose clamps, fits from 5/16” to 1/2” hose

Part No.	13008

REPLACEMENT OIL HOSE

- Transmission or engine oil hose
- High temperature OEM spec hose
- 300 p.s.i. burst rating

MADE IN U.S.A.

Part # 13003

Part # 13007

Part No.	Hose ID	Length	Application
13003	11/32”	4 feet	Transmission
13007	11/32”	25 feet	Transmission
13016	3/8”	5 feet	Transmission
13017	3/8”	25 feet	Transmission
15700	1/2”	10 feet	Engine
15701	1/2”	5 feet	Engine
15740	1/2”	8 feet	Engine
15799	1/2”	25 feet	Engine

COOLER INSTALLATION KITS

TRANSMISSION COOLER INSTALLATION KIT

- Complete installation kit for mounting most transmission coolers with 5/16" cooler lines
- Four feet 11/32" OEM spec hose

Part No. 12006

INSTA-MOUNT KIT

- Universal mounting kit for coolers & electric fans

Part No. 13001

TRANSMISSION COOLER INSTALLATION KIT

- Complete installation kit for mounting most transmission coolers with 5/16" cooler lines
- Four feet 11/32" OEM spec hose

Part No. 13006

RIGID MOUNT KIT

- 4" Universal bendable metal mounting brackets

Part No. 13002

TRANSMISSION COOLER INSTALLATION KIT

- Complete installation kit for mounting most transmission coolers with 5/16" cooler lines
- Eight feet 11/32" OEM spec hose

Part No. 13064

RIGID MOUNT KIT

- 4" universal bendable metal mounting brackets & 1/4" mounting hardware

Part No. 13062

ENGINE OIL COOLER INSTALLATION KIT

- Complete installation engine oil cooler kit
- Universal design to fit most automotive applications

See Engine Adapter Quick Reference Guide on page 43 for specific applications

Part No. 15751 | Type A

RIGID MOUNT KIT

- 10" universal bendable metal mounting brackets & 1/4" mounting hardware

Part No. 13063

Radiator Adapter Fittings

Barbed Splicer Fittings

Part No. 13028

DODGE/JEEP RADIATOR ADAPTER

Fits 1960-1997 Dodge Trucks with rubber transmission lines

Fits 1983-2007 Jeep with 5.2L, 4.2L, 4.0L, 2.5L Engines with rubber transmission lines

1/2"-20 Inverted Flare Fittings

Part No. 13024

FORD/LINCOLN/MERCURY RADIATOR ADAPTER

Fits 1983-2007 Ford/Lincoln/ Mercury Cars, Trucks, Blackwood, Bronco, Expedition, Navigator, Ranger, Vans with 7.3L, 6.9L, 5.8L, 5.0L, 4.9L, 4.6L, 4.2L, 2.9L, 2.8L, 2.3L Engines

9/16"-18 37°JIC Fitting

Part No. 13030

DODGE DAKOTA RADIATOR ADAPTER

Fits 1999-2005 Dodge Dakota

9/16"-24 45°SAE Fittings Male & Female

Part No. 13034

DODGE RADIATOR ADAPTER

Fits 1999-2003 Dodge Trucks, Vans with 5.9L, 5.2L, 3.9L Engines

5/8" Inverted Flare Fittings

Part No. 13018

GM RADIATOR ADAPTER

Fits 1981-2000 Buick w/ 5.7L, 3.8L, 3.3L, 3.1L, 2.5L, 2.4L, 2.3L, 2.2L Engines

Fits 1988-2007 Cadillac Cars, Trucks with 6.2L, 6.0L, 5.7L, 5.3L, 4.9L, 4.6L, 4.5L, 4.1L, 3.0L Engines

Fits 1987-2007 Chevrolet Cars, SUVS, Chevrolet, GM Trucks, Vans w/ 8.1L, 7.4L, 6.5L, 6.0L, 5.7L, 5.3L, 5.0L, 4.8L, 4.3L, 3.8L, 3.4L, 3.2L, 2.4L, 2.3L, 2.2L Engines

Fits 1996-2001 Oldsmobile Bravada with 4.3L Engine

Fits 1983-2005 Pontiac Cars, SUVS with 5.7L, 5.0L, 3.8L, 3.4L, 3.1L, 2.4L, 2.2L, 1.6L Engines

1/4" NPT M/F 3/8" NPT Male Fittings

Part No. 13014

FORD/MERCURY RADIATOR ADAPTER

Fits 1983-2007 Ford/Mercury Cars, Trucks, Bronco, Expedition, Ranger, Vans w/ 7.5L, 7.3L, 6.9L, 6.6L, 5.8L, 5.4L, 5.0L, 4.9L, 4.7L, 4.6L, 4.2L, 4.0L, 3.8L, 3.0L, 2.9L, 2.8L, 2.5L, 2.3L Engines

Fits 1983-2007 Mercury Cars w/ 5.8L, 5.0L, 4.6L, 3.8L, 3.0L, 2.5L, 2.3L Engines

5/8" Inverted Flare Fittings

Part No. 13025

FORD/LINCOLN TRUCKS & SUV'S RADIATOR ADAPTER

Fits 1998-2007 Ford/Lincoln Trucks & SUV's, Blackwood, Excursion, Expedition, Explorer, Navigator, Ranger with 7.3L, 6.9L, 6.8L, 5.4L, 5.0L, 4.6L, 4.0L, 3.0L, 2.5L Engines

Snap in Tube Fitting

Part No. 13035

GM RADIATOR ADAPTER

Fits 1993-2007 Buick with 4.6L, 4.2 L, 3.9L, 3.8L, 3.6L, 3.5L, 3.4L, 3.3L, 3.1L, 2.5L, 2.4L, 2.3L, 2.2L Engines

Fits 1993-2007 Cadillac 6.2L, 6.0L, 5.7L, 5.3L, 4.9L, 4.6L, 4.5L, 4.1L, 3.0L Engines

Fits 2000-2007 Chevrolet Cars, SUVS, Chevrolet, GM Trucks, Vans with 3.8L, 3.4L, 6.0L, 5.3L, 4.8L, 4.3L, 4.2L, 3.7L, 3.5L, 3.4L, 2.9L, 2.8L Engines

Fits 2003-2007 Isuzu SUVS with 4.2L, 5.3L Engines

Fits 2002-2004 Oldsmobile Bravada with 4.2L Engine

Fits 2001-2007 Pontiac with 3.9L, 3.8L, 3.5L, 3.4L, 3.1L Engines

Universal Transmission Line Fittings

5/16" Transmission Cooler Line to 3/8" NPT Hose Barb

Part No. 13031

3/8" Transmission Cooler Line to 3/8" NPT Hose Barb

Part No. 13032

1/2" Transmission Cooler Line to 1/2" NPT Hose Barb

Part No. 13033

INSTA-DAPT RADIATOR ADAPTER

Fits most vehicles with 5/16" transmission lines. Includes male and female threads.

Part No. 13004

See application guide for detail specific applications

BELT DRIVEN FAN SPACERS

DERALE PERFORMANCE
The Leader in Performance Cooling

- Strong one-piece Aluminum construction
- Attractive closed loop design
- Designed to fit 5/8”, 3/4” or 1.180 water pumps
- 11 part numbers fit wide variety of applications
- Clear anodized finish
- Includes mounting hardware

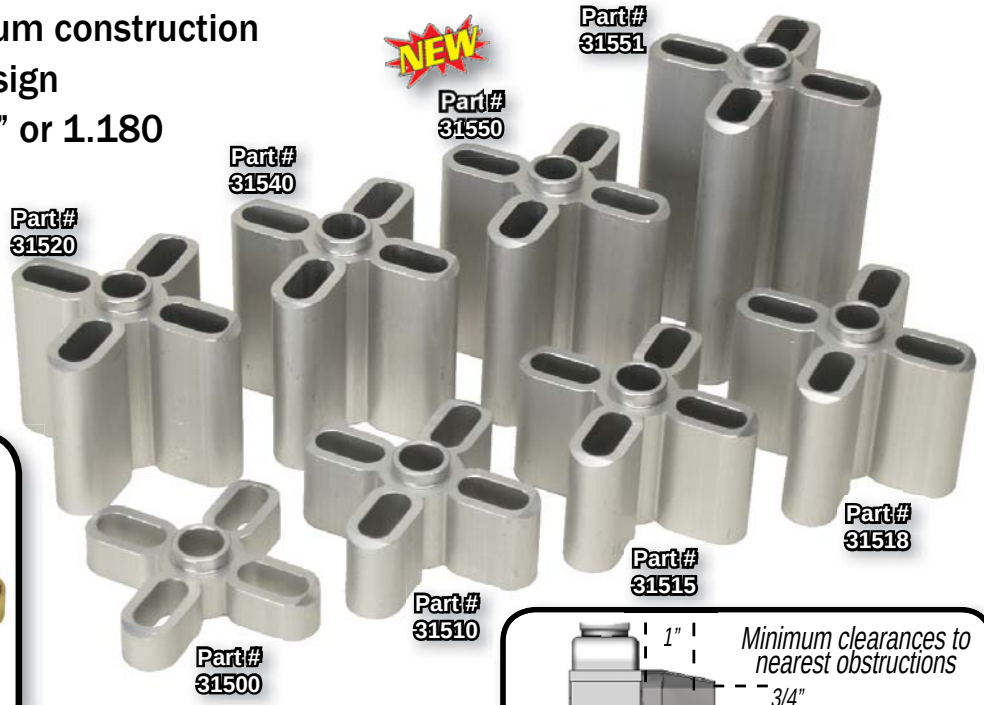

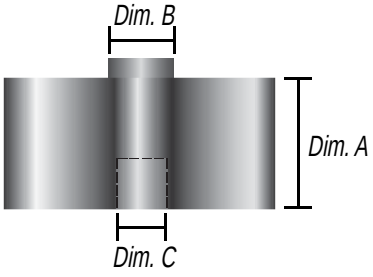

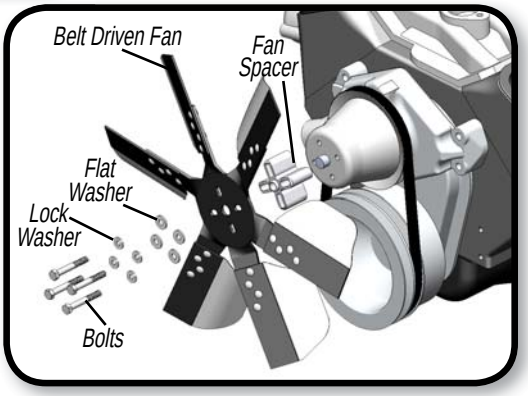

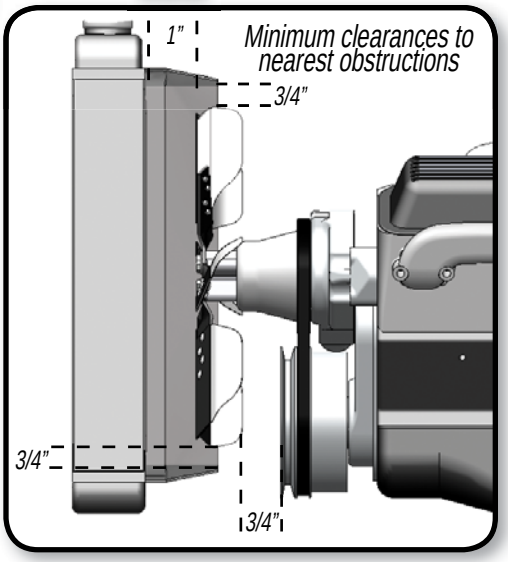

Part No.	Dim. A (Length)	Dim. B (Male Pilot Diameter)	Dim. C (Female Pilot Diameter)	Bolts (4 each)	Flange
31500	1/2”	5/8”	5/8”	5/16-18 / 5/16-24	1 3/4”-2 1/4”
31510	1”	5/8”	5/8” or 3/4”	5/16-18 / 5/16-24	1 3/4”-2 1/4”
31515	1 1/2”	5/8”	5/8” or 3/4”	5/16-18 / 5/16-24	1 3/4”-2 1/4”
31518	1 3/4”	5/8”	5/8” or 3/4”	5/16-18 / 5/16-24	1 3/4”-2 1/4”
31520	2”	5/8”	5/8” or 3/4”	5/16-18 / 5/16-24	1 3/4”-2 1/4”
31521	2”	5/8”	5/8” or 3/4”	8mm x 1.25	1 3/4”-2 1/4”
31540	2 1/4”	5/8”	5/8” or 3/4”	5/16-18 / 5/16-24	1 3/4”-2 1/4”
31541	2 1/4”	5/8”	1.180	8mm x 1.25	1 3/4”-2 1/4”
31547	2 1/4”	5/8”	5/8” or 3/4”	6mm x 1.00 / 8mm x 1.25	1 3/4”-2 1/4”
31550	2 1/2”	5/8”	5/8” or 3/4”	5/16-18 / 5/16-24	1 3/4”-2 1/4”
31551	3 1/2”	5/8”	1.180	8mm x 1.25	1 3/4”-2 1/4”

Heavy Duty Flex Fans

- Improves performance and mileage
- Heavy duty steel hubs
- Durable stainless steel blades
- Available in standard or reverse rotation
- Rated up to 10,000 RPM
- Large surface area pulls more air at low speeds
- Reinforced blade construction extends fan life

Derale Heavy Duty Flex Fans provide maximum airflow at low RPMs when the vehicle speed provides little or no airflow through the radiator. At higher RPMs, the vehicle speed provides ample airflow and the fan blades flatten out to minimize engine loading, increasing horsepower and mileage.

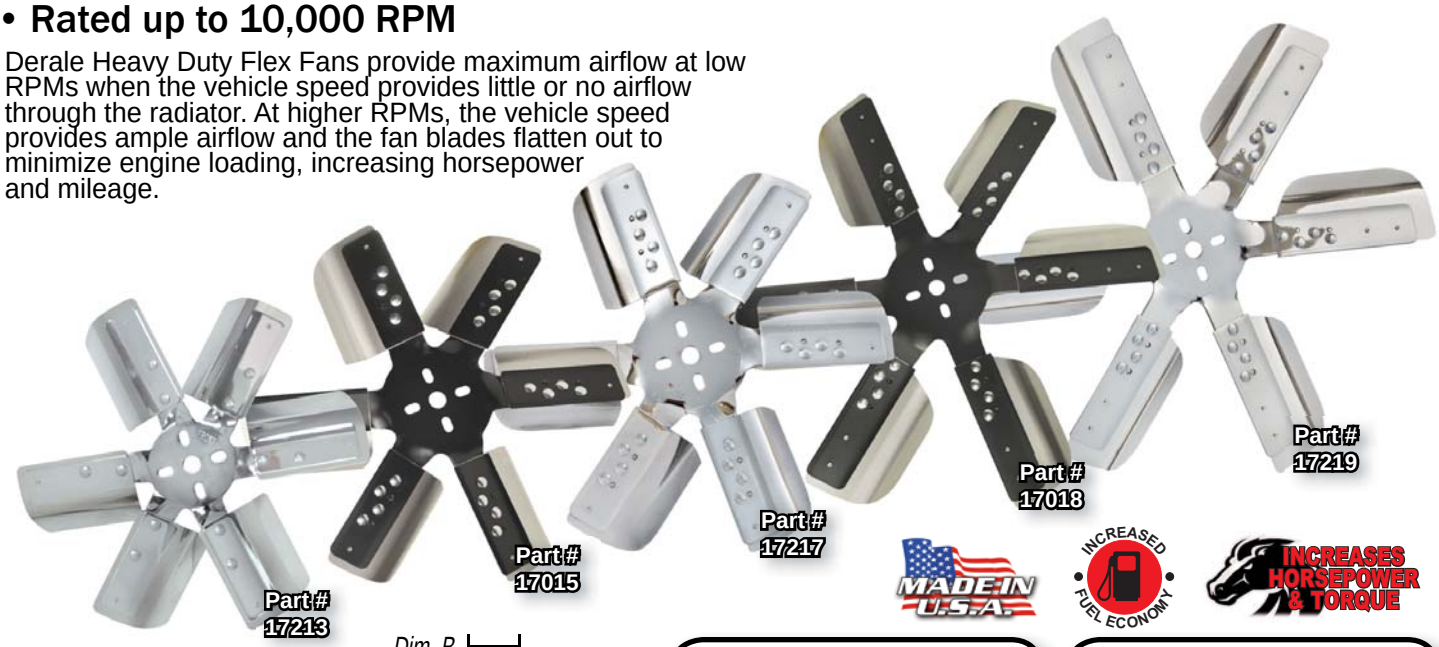

MADE IN U.S.A.

INCREASED FUEL ECONOMY

INCREASES HORSEPOWER & TORQUE

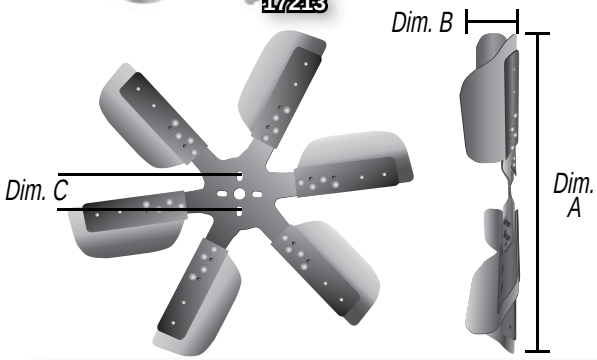

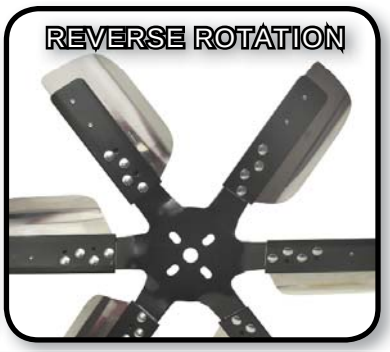

Stainless Black Hub Part No.	Stainless Chrome Hub Part No.	Fan Size	Rotation	Dim. A (Diameter)	Dim. B (Depth)	Dim. C (Flange)
17013	17213	13”	Standard	13”	2 1/8”	1 3/4”-2 1/4”
17015	17215	15”	Standard	14 3/4”	2 3/8”	1 3/4”-2 1/4”
17017	17217	17”	Standard	17 1/4”	2 3/8”	1 3/4”-2 1/4”
17018	17218	18”	Standard	18 1/4”	2 3/8”	1 3/4”-2 1/4”
17019	17219	19”	Standard	19 1/4”	2 3/8”	1 3/4”-2 1/4”
17615	-----	15”	Reverse	14 3/4”	2 3/8”	1 3/4”-2 1/4”
17617	17817	17”	Reverse	17 1/4”	2 3/8”	1 3/4”-2 1/4”
17618	17818	18”	Reverse	18 1/4”	2 3/8”	1 3/4”-2 1/4”
17619	17819	19”	Reverse	19 1/4”	2 3/8”	1 3/4”-2 1/4”

High Performance Stainless

- Stainless steel fan blades
- Chrome plated or black powdercoated hub
- Rated up to 8,000 RPM's
- Standard or reverse rotation

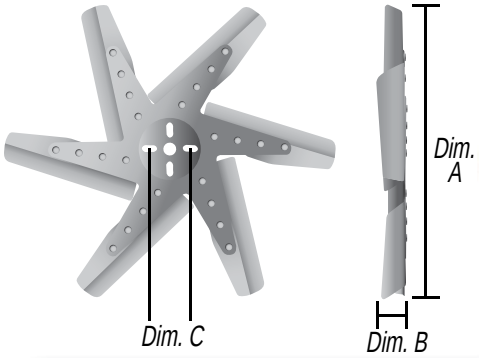

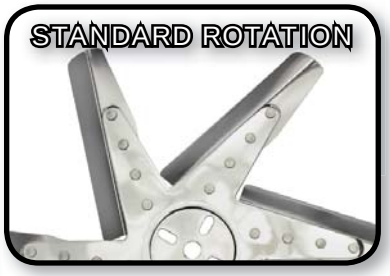

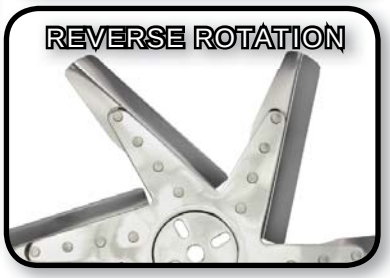

Stainless Black Hub Part No.	Stainless Chrome Hub Part No.	Fan Size	Rotation	Dim. A (Diameter)	Dim. B (Depth)	Dim. C (Flange)
19113	19213	13"	Standard	13 3/8"	1 1/8"	1 3/4"-2 1/4"
19115	19215	15"	Standard	15 1/4"	1 1/8"	1 3/4"-2 1/4"
19117	19217	17"	Standard	17"	1 1/8"	1 3/4"-2 1/4"
19118	19218	18"	Standard	18 1/4"	1 1/8"	1 3/4"-2 1/4"
19313	19713	13"	Reverse	13 3/8"	1 1/8"	1 3/4"-2 1/4"
19315	19715	15"	Reverse	15 1/4"	1 1/8"	1 3/4"-2 1/4"
19317	19717	17"	Reverse	17"	1 1/8"	1 3/4"-2 1/4"
19318	19718	18"	Reverse	18 1/4"	1 1/8"	1 3/4"-2 1/4"

High Performance Aluminum

- Aluminum fan blades
- Chrome plated hubs
- Rated up to 8,000 RPM's
- Red or blue anodized fan blades
- Standard rotation only

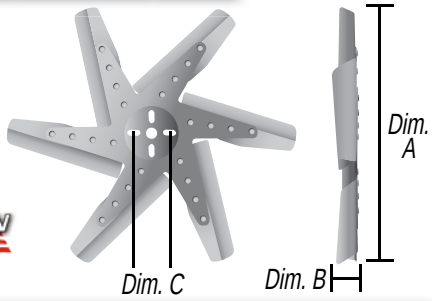

Part No.	Fan Size	Rotation	Blade Color	Dim. A (Diameter)	Dim. B (Depth)	Dim. C (Flange)
19417	17"	Standard	Red	17"	1 1/8"	1 3/4"-2 1/4"
19418	18"	Standard	Red	18 1/4"	1 1/8"	1 3/4"-2 1/4"
19517	17"	Standard	Blue	17"	1 1/8"	1 3/4"-2 1/4"
19518	18"	Standard	Blue	18 1/4"	1 1/8"	1 3/4"-2 1/4"

High Performance Aluminum

- Aluminum fan blades
- Black powdercoated hub
- Rated up to 8,000 RPM's
- Red or blue anodized fan blades
- Standard rotation only

MADE IN U.S.A.

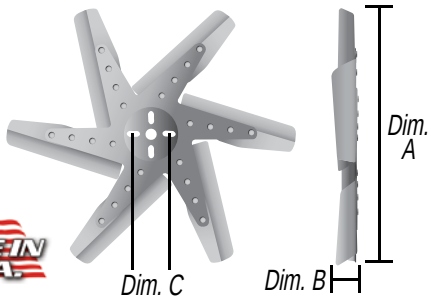

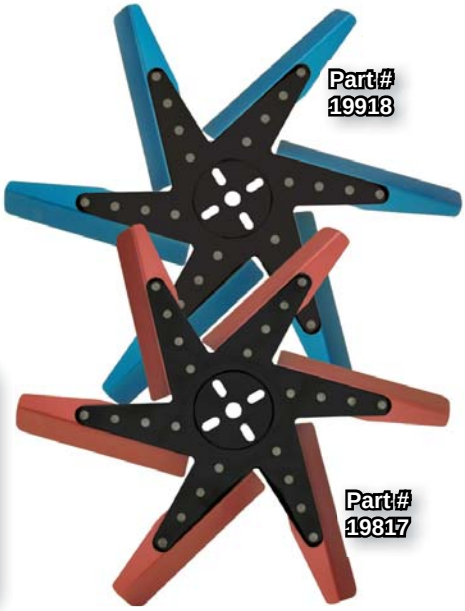

Part No.	Fan Size	Rotation	Blade Color	Dim. A (Diameter)	Dim. B (Depth)	Dim. C (Flange)
19817	**17"**	Standard	Red	17"	1 1/8"	1 3/4"-2 1/4"
19818	**18"**	Standard	Red	18 1/4"	1 1/8"	1 3/4"-2 1/4"
19917	**17"**	Standard	Blue	17"	1 1/8"	1 3/4"-2 1/4"
19918	**18"**	Standard	Blue	18 1/4"	1 1/8"	1 3/4"-2 1/4"

Fan Clutch Fans

- Steel fan blades
- Maximum full-time airflow
- Black powdercoated finish
- Standard or reverse rotation

MADE IN U.S.A.

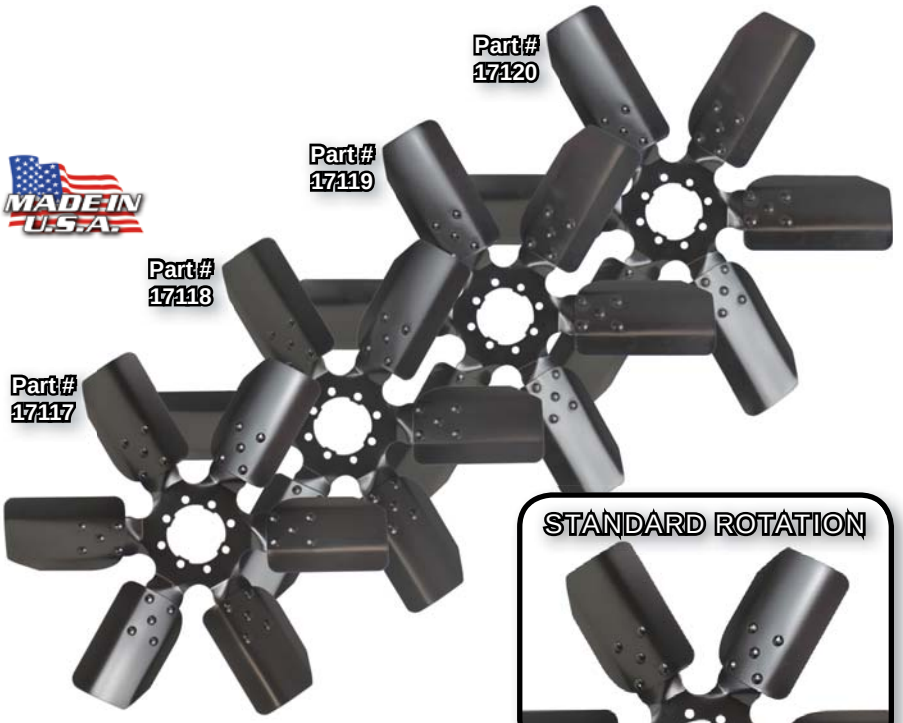

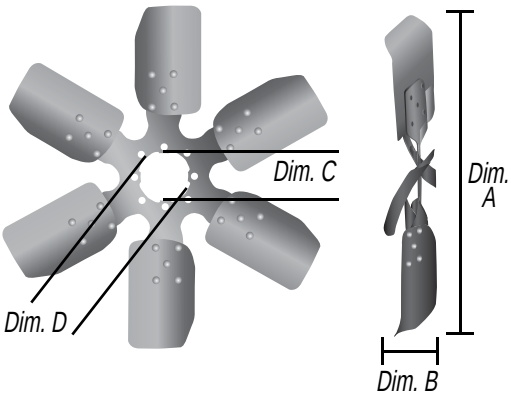

Standard Rotation Part No.	Reverse Rotation Part No.	Fan Size	Dim. A (Diameter)	Dim. B (Depth)	Dim. C (Flange)	Dim. D (Flange)
17117	**17917**	**17"**	17 1/4"	2"	2 3/8"	2 19/32"
17118	**17918**	**18"**	18"	2"	2 3/8"	2 19/32"
17119	**17919**	**19"**	19 1/8"	2"	2 3/8"	2 19/32"
17120	**17920**	**20"**	20"	2"	2 3/8"	2 19/32"

Rigid Race Steel Blade Fans

- Steel fan blades
- Maximum full-time airflow
- Rated up to 8,000 RPM's
- Standard or reverse rotation

MADE IN U.S.A.

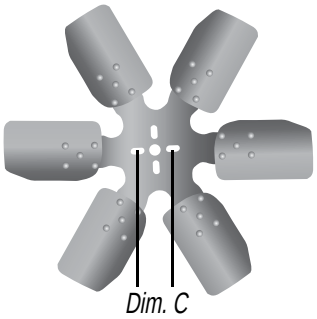

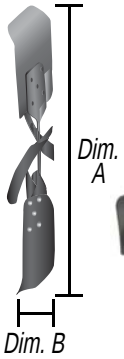

Standard Rotation Part No.	Reverse Rotation Part No.	Fan Size	Dim. A (Diameter)	Dim. B (Depth)	Dim. C (Flange)
17313	**17413**	**13"**	13"	2 3/16"	1 3/4"-2 1/4"
17315	**17415**	**15"**	15"	2 7/16"	1 3/4"-2 1/4"
17317	**17417**	**17"**	17"	2 5/16"	1 3/4"-2 1/4"
17318	**17418**	**18"**	18"	2 1/4"	1 3/4"-2 1/4"
17319	**17419**	**19"**	19"	2 1/4"	1 3/4"-2 1/4"
17320	**17420**	**20"**	19 7/8"	2 1/4"	1 3/4"-2 1/4"

Rigid Race Aluminum Blade Fans

- Aluminum fan blades
- Perfect replacement for fan clutch and fan
- Maximum full-time airflow
- Rated up to 8,000 RPM's
- Standard rotation only

MADE IN U.S.A.

Part No.	Fan Size	Rotation	Dim. A (Diameter)	Dim. B (Depth)	Dim. C (Flange)
17513	**13"**	Standard	12 3/4"	2"	1 3/4"-2 1/4"
17515	**15"**	Standard	14 3/4"	2"	1 3/4"-2 1/4"
17517	**17"**	Standard	16 3/4"	2"	1 3/4"-2 1/4"
17518	**18"**	Standard	17 3/4"	2"	1 3/4"-2 1/4"

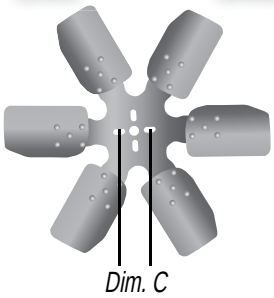

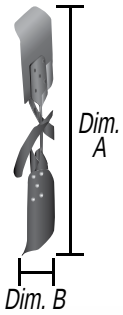

FAN CLUTCHES

- All aluminum body for maximum heat dissipation
- High quality heavy-duty bearing with Hi-Temp moly grease
- Multi-Fin design grabs more air and dispels more heat
- CNC machined to OE Specifications

For vehicle specific applications see application guide

Applications available to fit most year, make and model vehicles

MADE IN U.S.A.

Fan clutches are engineered to improve the vehicle's cooling system efficiency. The clutch engages the fan at low speeds when additional cooling is needed. At high speeds the clutch disengages the fan, removing the load against the engine and allowing the engine to run more efficiently.

There are two types of fan clutches, non-thermal and thermal. Non-thermal fan clutches engage the fan based on the shaft speed of the water pump. Thermal fan clutches engage the fan based on a bi-metal thermostatic coil, which senses the under hood temperature.

Derale offers a full line of thermal and non-thermal fan clutches to fit most popular foreign and domestic applications. Fan clutches are available in standard and reverse rotation.

NON-THERMAL

THERMAL

THERMAL SCREW ON

THERMAL IMPORT

HEAVY DUTY THERMAL

THERMAL TRUCK DRIVE

PART NUMBER INDEX

Part No.	Page
12006	55
12200	38
12213	38
12730	25
12731	25
12732	25
12733	25
12740	25
12741	25
12742	25
12743	25
12901	35
12902	35
12903	35
12904	35
12906	35
12907	35
13001	17,55
13002	55
13003	54
13004	56
13005	50
13006	55
13007	54
13008	54
13009	54
13010	41,54
13011	52
13014	56
13016	54
13017	54
13018	56
13020	26
13021	26
13022	26
13023	26
13024	56
13025	56
13026	52
13028	56
13030	56
13031	56
13032	56
13033	56
13034	56
13035	56
13062	55
13063	55
13064	55
13070	39
13072	39
13075	39
13090	42
13091	42
13092	42
13101	33
13102	33
13103	33
13104	33
13105	33
13106	33
13107	33
13108	33
13200	38
13201	33
13202	33
13203	33
13204	33
13205	33
13206	33
13207	33
13208	33
13210	38
13212	38
13213	38
13220	36
13221	36
13222	36
13223	36
13224	36
13225	36
13249	37
13250	37
13251	37
13252	37
13253	37
13254	37
13255	37
13256	37
13257	37
13260	37
13261	37
13262	37
13263	37
13264	37
13265	37
13266	37
13267	37
13300	23
13302	27
13303	34
13304	34
13306	34
13309	39
13310	39
13311	34
13312	34
13313	34
13314	34
13315	34
13316	34
13317	34
13318	34
13320	23
13322	27
13401	30
13402	30
13403	30
13501	32
13502	32
13503	32
13504	32
13611	31
13612	31
13613	31
13614	31
13700	23
13720	23
13730	25
13731	25
13750	19,22
13751	22
13760	21
13870	20
13900	23
13950	22
13960	21
14000	41
14002	41
14010	41
14200	40
14201	40
14202	40
14204	41
14207	41
14208	41
14210	41
15200	24
15220	24
15230	24
15300	23
15301	24,27
15302	44,46
15320	23
15321	24,27
15331	24,27
15405	44
15450	22
15451	46
15500	23
15502	44
15503	44
15505	44
15551	46
15602	44
15603	44
15604	44
15605	44
15651	46
15660	21
15700	54
15701	54
15702	45
15703	47
15704	47
15705	47
15706	47
15707	50
15708	50
15709	50
15714	53
15715	49
15716	49
15717	49
15718	49
15719	52
15720	45
15721	26
15724	47
15725	49
15726	52
15728	50
15730	45
15731	45
15732	45
15733	45
15734	45
15735	45
15740	54
15746	47
15747	47
15748	49
15749	49
15751	55
15752	26
15760	48
15761	48
15782	45
15799	54
15800	23
15820	23
15830	25
15831	25
15850	22
15851	22,44
15851	46
15860	21
15865	21
15870	20
15875	20
15876	20
15900	23
15950	22
15960	21
16104	9
16105	9
16110	8
16112	8
16114	8
16116	8
16136	9
16142	9
16200	3,17
16212	3
16214	3
16217	3
16308	13
16309	13
16310	13
16312	13
16314	13
16316	13
16507	10
16508	10
16509	10
16510	10
16512	10
16514	10
16516	10
16617	10
16618	10
16619	10
16620	10
16622	10
16624	10
16626	10
16700	11
16701	11
16720	16
16721	16
16728	16,26
16730	16,26
16731	16,26
16735	16

PART NUMBER INDEX

Part No.	Page
16736	16
16737	16
16738	16
16739	16
16740	17
16741	17
16742	17
16743	17
16744	17
16745	17
16746	17
16749	15
16750	14,15
16751	17
16754	17
16759	15
16760	14,15
16763	17
16764	17
16765	17
16769	15
16778	14
16779	14
16788	14
16789	14
16812	7
16816	4
16819	4
16821	4
16822	4
16824	11
16825	5
16826	5
16834	11
16908	13
16909	13
16910	13
16912	13
16914	13
16916	13
16918	9
16919	6
16925	7
16926	7
16927	6
16928	7
16934	7
17013	58
17015	58
17017	58
17018	58
17019	58
17117	60
17118	60
17119	60
17120	60
17213	58
17215	58
17217	58
17218	58
17219	58
17313	61
17315	61
17317	61
17318	61
17319	61
17320	61
17413	61
17415	61
17417	61
17418	61
17419	61
17420	61
17513	61
17515	61
17517	61
17518	61
17615	58
17617	58
17618	58
17619	58
17817	58
17818	58
17819	58
17917	60
17918	60
17919	60
17920	60
18212	3
18214	3
18217	3
18735	16
18738	16
18739	16
18910	12
18912	12
18914	12
18916	12
19113	59
19115	59
19117	59
19118	59
19213	59
19215	59
19217	59
19218	59
19313	59
19315	59
19317	59
19318	59
19417	59
19418	59
19517	59
19518	59
19713	59
19715	59
19717	59
19718	59
19817	60
19818	60
19917	60
19918	60
20161	18
20500	19
20561	19
25005	50
25011	52
25702	45
25707	50
25708	50
25709	50
25719	52
25720	45
25728	50
25730	45
25731	45
25732	45
25733	45
25734	45
25750	50
25751	50
25770	45
25771	45
25772	45
25773	45
25774	45
25782	45
25783	45
25791	52
25792	52
25793	52
31500	57
31510	57
31515	57
31518	57
31520	57
31521	57
31540	57
31541	57
31547	57
31550	57
31551	57
35020	26
35021	26
35022	26
35025	26
35026	26
35027	26
35703	47
35704	47
35705	47
35706	47
35707	51
35708	51
35709	51
35724	47
35727	51
35728	51
35729	51
35747	47
35798	54
35799	54
35920	54
35921	54
35922	54
50020	28
51006	29
51008	29,44,46
51010	29
51078	28
51606	29
51608	29
51610	29
51678	28
51906	29
51908	29
51910	29
51978	28
52506	21,29
52508	21,29
52510	21,29
52578	28
53406	29
53408	29
53410	29
53478	28
54006	20,29
54008	20,29
54010	20,29
54012	20
54078	28
59006	28,54
59008	28,54
59010	28,54
59012	28,54
59106	54
59108	54
96900	40
96901	40
96905	41
96906	41
96908	41
96909	41
98001	53
98002	53
98003	48
98004	48
98020	54
98021	54
98028	53
98100	53
98101	53
98102	53
98103	53
98104	53
98105	53
98106	53
98200	53
98201	53
98202	53
98203	53
98204	53
98205	53
98233	53
98234	53
98244	53
98333	53
98344	53
98400	53
98410	53
98450	53
98451	53
98452	53

PROMOTIONAL ITEMS

DERALE PERFORMANCE
The Leader in Performance Cooling

T-Shirts

- 100% Cotton
- Heavy-Duty Fabric
- Machine Washable
- Black Color
- Short Sleeve

Med. - # 79001
Large. - # 79002
X-Large. - # 79003
XX-Large. - # 79004

Button-Up Shirts

- 100% Cotton
- Machine Washable
- Black Color
- Short Sleeve

Med. - # 79101
Large. - # 79102
X-Large. - # 79103
XX-Large. - # 79104

Banners

Heavy Duty Derale Performance Vinyl Banner with metal grommets.

24" x 48"

79300

Posters

Defeat the Heat with Derale Transmission Coolers Poster.

18" x 24"

79301

Decals

6" x 3" Derale Performance Diecut Vinyl Decal # 79502

4" x 2" Derale Performance Diecut Vinyl Decal # 79501

3 1/2" x 1" Derale Performance Foil Decal # 79500

Retail Product Display Headers

Derale Performance retail product headers fit 48" long product displays. Made from vinyl with adhesive backing.

Display Header 1
8" x 48"
79302

Display Header 2
8" x 48"
79303

Both Display Headers (2 piece) 8" x 96"
79304

DERALE PERFORMANCE

The Leader in Performance Cooling

WWW.DERALE.COM

DISTRIBUTED BY:

800-421-6288 • 323-266-3850 • Fax 323-263-3948
3901 Medford Street, Los Angeles, CA 90063

$3.00